CITY COUNCIL BUSINESS MEETING AGENDA
1705 MAIN STREET, DAPHNE, AL
JULY 5, 2011
BUSINESS MEETING
6:30 P.M.

1. **CALL TO ORDER**
2. **ROLL CALL/INVOCATION / PLEDGE OF ALLEGIANCE**

3. **APPROVE MINUTES:** Council meeting minutes / June 20, 2011

PUBLIC HEARING: Land Use and Development Ordinance

PUBLIC HEARING: Proposed Memorandum of Understanding agreement with New Horizon Retail Development LLC for development of Academy Village commercial development on Highway 90

MOTION: By Councilman Scott for reconsideration: Ordinance 2011-48 / Appropriation of Funds: Lott Park and Trione Sports Complex Improvements

4. REPORT STANDING COMMITTEES:

A. FINANCE COMMITTEE / Boulware

B. BUILDINGS & PROPERTY COMMITTEE- Lake

Need Council Representative

C. PUBLIC SAFETY COMMITTEE –

D. CODE ENFORCEMENT/ORDINANCE COMMITTEE -

E. PUBLIC WORKS COMMITTEE / SOLID WASTE AUTHORITY - Yelding

Review minutes / June 20th

Appoint Committee Members to the Environmental Advisory Committee

a.) **Motion:** Authorize legal action against Thompson Engineering / Errors and Omissions / May Day Park Boat Ramp

b.) **Motion:** Approval to accept unnamed Right-of-Way for acquisition and maintenance / Subject to Right-of-Way deed from owner, and to prepare the deed and resolution for acceptance

5. REPORTS OF SPECIAL BOARDS & COMMISSIONS:

A. Board of Zoning Adjustments – Jones

Resignation of Alternate Member Barry Taylor

Council needs to appoint a replacement

B. Downtown Redevelopment Authority – Barnette

Review minutes / June 27th

Need to appoint a replacement for a member who resigned

C. Industrial Development Board – Yelding

D. Library Board – Lake

Need Council Representative

E. Planning Commission – Barnette

Review minutes / May 26th

a.) Set a Public Hearing Date for ***August 1, 2011*** ,and approve advertising to consider:

1.) Annexation:	Audubon Holding, LLC
Property Located:	Southeast of the intersection of County Road 64 and Pollard Road
Present Zoning:	RMF-6, Multiple Family District in Baldwin County District 15
Requested Zoning:	R-4, High Density Multi-Family Residential District
Recommendation:	Unanimous Favorable

2.)	Annexation:	Right-of-Way of AL State Highway181
	Property Located:	AL State Highway 181 from Lawson Road South to the Southernmost Corporate Limits of the City of Daphne
	Recommendation:	Unanimous Favorable

F. Recreation Board – Reese
G. Utility Board - Scott
Review minutes / April 27th

6. REPORTS OF OFFICERS:
A. Mayor's Report
B. City Attorney's Report
C. Department Head Comments

7. PUBLIC PARTICIPATION:

8. RESOLUTIONS & ORDINANCES:

RESOLUTIONS:

NO RESOLUTIONS

ORDINANCES:

2ND READ

a.) Compressor Replacements (3) for Boys & Girls Club. . . . . /Ordinance 2011-50

b.) Indoor Man Lift for Building Repairs and Maintenance. . . . . /Ordinance 2011-51

c.) Right-of-Way Acquisition / Well Road. . . . . ./Ordinance 2011-52

d.) Lodging Tax Appropriation: Pedestrian Bridge @D'Olive Creek/
Engineering Design Fee & Environmental Permit. . . . . ./Ordinance 2011-53

1ST READ

e.) Land Use and Development Ordinance. . . . . ./Ordinance 2011-54

9. COUNCIL COMMENTS
10. ADJOURN

CITY OF DAPHNE
CITY COUNCIL MEETING

ROLL CALL

CITY COUNCIL:	**CALL VOTES**
COUNCILMAN YELDING	PRESENT__ ABSENT__ __
COUNCILWOMAN BARNETTE	PRESENT__ ABSENT__
COUNCILMAN LAKE	PRESENT__ ABSENT__ __
COUNCILMAN REESE	PRESENT__ ABSENT__ __
COUNCILMAN SCOTT	PRESENT__ ABSENT__ __
COUNCIMAN BOULWARE	PRESENT__ ABSENT__ __
COUNCILMAN PALUMBO	PRESENT__ ABSENT__ __
MAYOR	
MAYOR SMALL	PRESENT__ ABSENT__ __
CITY CLERK:	
DAVID L. COHEN	PRESENT___ ABSENT___
CITY ATTORNEY:	
CITY ATTORNEY JAY ROSS	PRESENT__ ABSENT

MINUTE NOTES:

CITY COUNCIL MEETING
MINUTES

NOTES:

COMMITTEE RECOMMENDATIONS

JUNE 20, 2011
CITY COUNCIL MEETING
1705 MAIN STREET
DAPHNE, AL
6:30 P.M.

1. CALL TO ORDER

Council President Barnette called the meeting to order at 6:30 p.m.

2. ROLL CALL/INVOCATION/PLEDGE OF ALLEGIANCE

Invocation was given by Councilman Boulware.

COUNCIL MEMBERS PRESENT: Bailey Yelding; Cathy Barnette; John Lake; Kelly Reese; Ron Scott; Derek Boulware; August Palumbo.

Also present: Mayor Small; David Cohen, City Clerk; Rebecca Hayes, Assistant City Clerk; Jay Ross, City Attorney; James White, Fire Chief; David McKelroy, Recreation Director; Adrienne Jones, Planning Director; David Carpenter, Police Chief; Kim Briley, Finance Director; Richard Merchant, Building Official; Tonja Young, Library Director; Richard Johnson, Publics Works Director; Margaret Thigpen, Civic Center Director; Scott Hutchinson, City Engineer; Al Guarisco, Village Point Foundation; Doug Dugat, Recreation Board; Willie Robison, BZA; Mickey Boykin, Daphne Museum Board;.

Absent: Vickie Hinman, Human Resources Director.

3. APPROVE MINUTES

MOTION BY Councilman Lake to adopt the June 6, 2011 Council meeting minutes. *Seconded by Councilman Scott.*

AYE ALL IN FAVOR NAY NONE OPPOSED MOTION CARRIED

MOTION BY Councilman Lake to adopt the June 13, 2011 Work Session minutes with the amendment to include in the minutes "Set a Public Hearing date of July 11, 2011 to discuss the Natural Resource Damage Assessment funds." *Seconded by Councilman Scott.*

AYE ALL IN FAVOR NAY NONE OPPOSED MOTION CARRIED

4. <u>REPORT OF STANDING COMMITTEES:</u>

A. FINANCE COMMITTEE – Boulware

The minutes for the June 13th meeting are in the packet.

MOTION BY Councilman Boulware to accept the Treasurers report as of April 30, 2011, in the amount of $21,214,452.58. *Seconded by Mr. Scott*.

AYE ALL IN FAVOR NAY NONE OPPOSED MOTION CARRIED

Sales and Use Taxes: April 30, 2011

Sales and Use Tax Collected for March 2011	-	$916,537
Sales and Use Tax Budgeted for March 2011	-	$799,876
Over Budget (for April)	-	$116,661

YTD Budget Collections Variance – Over Budget - $647,272

Lodging Tax Collections, April 2011

The Lodging Tax Collections report shows $48,488 collected for April 2011.

The next meeting will be July 11th at 4:00 p.m. in the Executive Conference room.

B. BUILDINGS AND PROPERTY COMMITTEE – Lake

The minutes for the June 6th meeting are in the packet.

C. PUBLIC SAFETY COMMITTEE – Palumbo

The minutes for the June 8th meeting are in the packet. The July meeting has been changed to July 6th.

D. CODE ENFORCEMENT/ORDINANCE COMMITTEE – Palumbo

The committee will meet July 6th after the Public Safety meeting to accommodate HR's presentation on workman's compensation.

E. PUBLIC WORKS COMMITTEE/SOLID WASTE AUTHORITY – Yelding

The minutes for the May 25th minutes are in the packet. The Public Work's Director handed out his report to council. The Lake Forest road project is ahead of schedule, and the TimberCreek road project is 80% complete, and should be completed by June27th. The committee met today, and the minutes will be in the next council packet.

5. <u>REPORTS OF SPECIAL BOARDS & COMMISSIONS:</u>

A. Board of Zoning Adjustments – Mrs. Jones

No report.

B. Downtown Redevelopment Authority – Barnette

The next meeting will be Monday, June 27t at 5:15 p.m.

C. Industrial Development Board – Yelding

No report.

D. Library Board – Lake

The minutes for the April 7th, May 5h and June 2nd meeting are in the packet. There were 2,741 people that utilized the computers which is double the number from last year. The Library received a grant for $60,000.

E. Planning Commission – Jones

The next meeting will be Thursday at 5:00 p.m. in the Council Chambers.

G. Utility Board – Scott

The minutes for the march 30th meeting are in the packet. The next meeting will be Wednesday 5:00 p.m. in the Council Chambers.

6. <u>REPORTS OF THE OFFICERS:</u>

A. Mayor's Report

No report.

B. City Attorney Report

No report.

C. Department Head Comments

David Carpenter – Police Chief – reported that they have launched the "Lock it or Lose it" campaign. He reminded everyone to lock up.

David McKelroy – Recreation Director - reported that Wet & Wild will be June 22nd and June 29th at Lott Park from 10:00 -1:00. Friday and Saturday the USA softball tournament will be at Trione, and there are 89 teams registered with 35 of them outside of driving distance. He announced the dates for the Dixie Youth and Dixie Boys tournaments. There will be fireworks July 4th at Trione, and Public Works has started the gazebo at Centennial Park. Improvements to the rest of the parks will follow.

7. PUBLIC PARTICIPATION

Mr. Clint Martin – 453 Ridgewood Drive – thanked council for following through on the road projects in Lake Forest, and for including curb and gutter.

Mr. Chester McConnell – 8803 Pine Run - spoke regarding the I-10 corridor, and asked council to consider that the watershed is in bad shape, and will continue to worsen in time. He asked council to consider building commercial detention now on the vacant lots on Highway 90 before the developments come in, otherwise, it will be too late.

Mr. Ken Jacobs – 1012 Calverdale Circle – supports the improvements at the Dog Park.

Mrs. Doris Smith – Caroline Avenue – asked council to extend the advertising clause in the sign ordinance.

Mr. Henry Lawson – 104 Booksketuh Circle – said the roads in Lake Forest are looking great, he is opposed to tall signs, he is for the improvements at the Dog Park and he is concerned about the erosion issue at the I-10 corridor.

8. RESOLUTIONS, ORDINANCES, ORDERS AND OTHER BUSINESS

MOTION BY Councilman Scott to move forward with the agreement with New Horizon Retail Development LLC for development of Academy Village commercial development on Highway 90 with the following stipulations: 1) issue limited liability tax warrants in an amount not to exceed $1,900,000 with debt payments to be paid from 1% of the Sales Tax collections generated by Academy and other businesses within the development; 2) set the interest rate not to exceed 7.5%; 3) establish a pay-back period not to exceed 15 years with no pre-payment penalty. ***Seconded by Councilman Boulware.***

MOTION BY Councilman Palumbo to hold a Public Hearing prior to proceeding with the Memorandum of Understanding with New Horizon Retail Development, LLC., and to set the Public Hearing date for July 5, 2011. ***Seconded by Councilman Lake.***

VOTE ON AMENDMENT

AYE ALL IN FAVOR NAY NONE OPPOSED MOTION CARRIED

VOTE ON ORIGINAL MOTION AS AMENDED

AYE ALL IN FAVOR NAY NONE OPPOSED MOTION CARRIED

RESOLUTIONS:

a.) Emergency Response Equipment Purchase Authorization: Radio Equipment (Mississippi Canyon 252 Incident (Deep Water Horizon – Oil Spill) Grant. . . . . /Resolution 2011-50

b.) Declaring Certain Property Surplus. . . . . ./Resolution 2011-51

MOTION BY Councilman Boulware to *waive the reading* of Resolution 2011-50. ***Seconded by Councilman Scott.***

AYE ALL IN FAVOR NAY NONE OPPOSED MOTION CARRIED

MOTION BY Councilman Boulware to *waive the reading* of Resolution 2011-51. ***Seconded by Councilman Scott.***

AYE ALL IN FAVOR NAY NONE OPPOSED MOTION CARRIED

MOTION BY Councilman Boulware to *adopt* Resolution 2011-50. ***Seconded by Councilman Scott.***

AYE ALL IN FAVOR NAY NONE OPPOSED MOTION CARRIED

MOTION BY Councilman Boulware to adopt Resolution 2011-51. ***Seconded by Councilman Scott.***

AYE Yelding, Reese, Scott, Boulware, Palumbo, Barnette NAY Lake

MOTION CARRIED

ORDINANCES:

2ND READ

a.) Extension of the Moratorium on Outdoor Stand-Alone Ice Vending Machines. . . . . /Ordinance 2011-47

b.) Appropriation of Funds: Lot Park & Trione Sports Complex Improvements. . . . . ./Ordinance 2011-48

1ST READ

c.) Compressor Replacements (3) for Boys & Girls Club. . . . . ./Ordinance 2011-50

d.) Indoor Man Lift for Building Repairs and Maintenance. . . . . /Ordinance 2011-51

e.) Right-of-Way Acquisition / Well Road. . . . . Ordinance 2011-52

f.) Lodging Tax Appropriation: Pedestrian Bridge @D'Olive Creek/ Engineering Design Fee & Environmental Permit. . . . . ./Ordinance 2011-53

MOTION BY Councilman Boulware to *waive the reading* of Ordinances 2011-47 and 2011-48. Seconded *by Councilman Palumbo.*

AYE ALL IN FAVOR NAY NONE OPPOSED MOTION CARRIED

MOTION BY Councilman Boulware to *adopt* Ordinance 2011-47. *Seconded by Councilman Yelding*.

AYE ALL IN FAVOR NAY NONE OPPOSED MOTION CARRIED

MOTION BY Councilman Palumbo to *adopt* Ordinance 2011-48. *Seconded by Councilman Lake.*

ROLL CALL VOTE

Yelding	**Nay**	**Boulware**	**Nay**
Lake	**Aye**	**Palumbo**	**Aye**
Reese	**Nay**	**Barnette**	**Aye**
Scott	**Nay**		

AYE Lake, Palumbo, Barnette NAY Yelding, Reese, Scott, Boulware

MOTION FAILED

ORDINANCES 2011-50, 2011-51. 2011-52 AND 2011-53 WERE MADE 1ST READ.

8. COUNCIL COMMENTS

Councilman Scott said that he noticed in the paper that a Daphne High School student that graduated in the IB Program was Georgia Tech's number one freshman student out of a class of some 4,000.

Councilman Palumbo stated that it is hard for him to find words to express his disappointment in this council to deny the elderly folks that go to the Dog Park $3,000 to build shade pavilions in a park that has no shade, and to use the argument that they planted some oak trees that might have some shade in 40 years is absolutely ludicrous. This demonstrates to him the priorities. They spent $600,000 to put one football field at Trione, and that includes the lights. He mentioned again the expenditure of $15,000 just to have purple and gold lime on the field. The folks that go out there every day, and use the Dog Park aren't worthy of the $3,000 expenditure from this council. It is hard for him to find any rational explanation for that, and the large amounts of money that they spend correcting mistakes, if you will, by the city, and even employees, and correction situations is staggering compared to this small amount of money. The city has two recreational activities here that are very much a part of recreation. Not just football, not just the softball fields. They can seem to find no end to the financing for those projects, but for the other citizens that avail themselves to the paltry recreational facilities, and they don't have $3,000. It does not make him proud to be a member of the council.

Council President Barnette thanked her colleagues for deferring the motion regarding Academy Sports Regardless of the outcome she thinks the City of Daphne is business friendly. She does not think it is a matter of being business friendly, but for her it is what are the benefits verses the cost. Just because revenue potential is there, to her, does not make it a good project for Daphne. She does not see the benefits on this piece of property for this project, and she is glad they slowed it down enough so that they can discuss the merits. She would love to have Academy here, but revenue for revenue sake, and at the cost of the environment does not make good business for her.

9. ADJOURN

MOTION BY Councilman Yelding to adjourn. ***Seconded by Councilman Scott.***

AYE ALL IN FAVOR NAY NONE OPPOSED **MOTION CARRIED**

There being no further business to discuss the meeting adjourned at 7:28 p.m.

Respectfully submitted by,

_____
David L. Cohen,
City Clerk, MMC

Certification by Presiding Officer:

_____
Cathy S. Barnette,
Council President

PUBLIC HEARING

JULY 5, 2011

TO CONSIDER:

1.) LAND USE & DEVELOPMENT ORDINANCE

MEMORANDUM

To: Office of the City Clerk

From: Adrienne D. Jones,
Director of Community Development

Subject: Proposed Amendments to the City of Daphne Land Use and Development Ordinance

Date: March 10, 2010

At the February 25, 2010 regular meeting of the City of Daphne Planning Commission, seven members were present and the vote carried unanimously for the favorable recommendation of the acceptance of the above captioned amendments to the City of Daphne Land Use and Development Ordinance.

Upon receipt of said documentation, please prepare an ordinance and place on the appropriate agenda for action by the City Council.

Thank you,
ADJ/jd

cc: file

Enclosure

1. Digital copy of the proposed amendments

CITY OF DAPHNE
ORDINANCE NO. 2011 -

AN ORDINANCE TO ADOPT THE CITY'S OFFICIAL LAND USE AND DEVELOPMENT ORDINANCE AND TO REPEAL ORDINANCE No. 2002-22 AND ALL ITS SUBSEQUENT AMENDMENTS

WHEREAS, the Planning Commission of the City of Daphne at their regular meeting held on February 25, 2010, considered certain amendments to the City of Daphne Land Use and Development Ordinance and set forth an affirmative recommendation to the City Council of the City of Daphne that said amendments should be affirmed in the form of a new Land Use and Development Ordinance ("Ordinance"); and,

WHEREAS, due notice of the said Ordinance has been presented to the public as required by law through publication and open display at the City of Daphne Public Library and City Hall; and,

WHEREAS, a public hearing in regards to the Ordinance was held on July 5, 2011; and,

WHEREAS, the Mayor and City Council of the City of Daphne, after due consideration, deem that the new Ordinance is proper and in the interests of the health, safety, and welfare of the citizens of the City of Daphne.

NOW, THEREFORE, BE IT ORDAINED BY THE CITY COUNCIL OF THE CITY OF DAPHNE, ALABAMA, AS FOLLOWS:

SECTION I: LAND USE AND DEVELOPMENT ORDINANCE.

The City of Daphne Land Use and Development Ordinance No. 2011-54 shall be considered the official Land Use and Development Ordinance of the City of Daphne, Alabama.

SECTION II: REPEALER

The City of Daphne Ordinances Nos. 2002-22, 2003-26, 2004-50, 2004-51, 2005-38, 2005-53, 2006-39, 2006-76, 2008-45, and 2010-07 are hereby repealed in their entirety. Any Ordinance, or parts thereof, heretofore adopted by the City Council of Daphne, Alabama, which is in conflict with this Ordinance be and is hereby repealed to the extent of such conflict.

SECTION III: SEVERABILITY

If any section, subsection, sentence, clause, phrase, or portion of this ordinance is for any reason held invalid or unconstitutional by any court of competent jurisdiction, such portion shall be deemed a separate, distinct and independent provision and such holding shall not affect the validity of the remaining portions hereof.

SECTION IV: EFFECTIVE DATE

This Ordinance shall take effect and be in force from and after the date of its approval by the City Council of the City of Daphne and publication as required by law.

ADOPTED AND APPROVED BY THE CITY COUNCIL OF THE CITY OF DAPHNE, ALABAMA, THIS____ DAY OF _____, 2011.

_____
CATHY BARNETTE,
CITY COUNCIL PRESIDENT

_____
FRED SMALL,
MAYOR

ATTEST:

_____
DAVID COHEN,
CITY CLERK, MMC

THE CITY OF DAPHNE

LAND USE
AND
DEVELOPMENT ORDINANCE

Prepared by
The City of Daphne
Department of Community Development
Post Office Box 400
Daphne, Alabama 36526

Land Use & Development Ordinance Administration

Mayor
Honorable Fred Small, Mayor

Daphne City Council
Bailey Yelding, Jr., District 1
President, Cathy Barnette, District 2
John L. Lake, District 3
Kelly Reese, District 4
Ron Scott, District 5
President Pro-Tem, Derek Boulware, District 6
August (Gus) Palumbo, District 7

David Cohen, City Clerk
David Carpenter, Police Chief

City of Daphne Planning Commission
Honorable Mayor, Fred Small
Councilwoman, Cathy Barnette
James White, Fire Chief
Ed Kirby, *Chairman*
Larry Chason, *Vice Chairman*
Joe Lemoine, *Secretary*
Dan Gibson
Victoria Phelps
Don Terry

Department of Community Development Staff
Adrienne D. Jones, Director/Zoning Administrator
Jan Dickson, Planning Coordinator
Nancy Anderson, GIS Manager
Pat Houston, Acting Administrative Assistant

Technical Review Team
Richard Johnson, Director of Public Works
Richard Merchant, Building Official/Flood Plain Administrator
Ashley G. Campbell, Environmental Programs Manager
Chip Martin, Fire Marshal
Lonnie Jones, Code Enforcement Officer
Danny Lyndall, Daphne Utilities
Leon Barber, Riviera Utilities

TABLE OF CONTENTS

TITLES	SECTION NUMBERS
ARTICLE I	
Purpose, Repeals, Enactment, Short Title	
Purpose	1-1
Repeals and Enactment	1-2
Short Title	1-3
ARTICLE II	
Legal Status	
Authority	2-1
Jurisdiction	2-2
ARTICLE III	
Official Plans and Maps	
Implementation	3-1
Future Land Use Map	3-2
Official Zoning District Map	3-3
Amendments to the Official Zoning District Map	3-4
Files of Properties Rezoned, Variances Granted, and Subdivisions Approved	3-5
Official Olde Towne District Map	3-6
Amendments to the Official Olde Towne District Map	3-7
Other Official Maps	3-8
Amendments to the Official Maps	3-9
ARTICLE IV Intentionally Left Blank	
ARTICLE V	
Duties and Powers of the Planning Commission	
Authority	5-1
ARTICLE VI	
Procedures for the Transaction of Business	
Implementing Authority	6-1
Public Hearings	6-2
Rules	6-3
Meetings	6-4
Agenda	6-5
Quorum	6-6
Applications	6-7
Study-Additional Review Period	6-8
Signatures	6-9
Interpretations/Mediations	6-10
Public Notice Signs	6-11

ARTICLE VII
Building Official
Authority 7-1
Permits and Certificates 7-2
Continuance of Previously Issued Permits 7-3
Reference to Technical Codes 7-4

ARTICLE VIII
Definition of Terms
Usage 8-1
Words and Terms Defined 8-2
Acronyms/Abbreviations 8-3

ARTICLE IX
District Provisions
Rules for Determining Boundaries 9-1
Nonconformance 9-2
Blocks 9-3
Lots 9-4
Flag Lots 9-5
Lots of Record 9-6
Substandard Lots of Record 9-7
Farm Land 9-8
Yards 9-9
One Principal Building per Lot 9-10
Accessory Uses 9-11
Accessory Structure 9-12
Access to Public Streets 9-13
Single Family Dwelling 9-14

ARTICLE X
General Provisions
Screening, Lighting and Space 10-1
Use 10-2
Building Height 10-3
Height Exception 10-4
Fire Hazards 10-5
Total Capacity of Flammable Materials Permitted 10-6
Water Pollution 10-7
Compliance 10-8
Traffic Impact Analysis 10-9
Well Head Protection Area 10-10
Dumpsters, Trash Refuse & Recycling Containers 10-11

ARTICLE XI

Minimum Standards & Required Improvements for Subdivisions & Commercial Site Developments

Suitability of Land	11-1
Land Subject to Flooding	11-2
Conformance with Existing Plans	11-3
Penalties	11-4
Subdivision Exceptions & Exemptions	11-5
Minimum Street Requirements Table	11-6
Typical Illustrations (Hammerhead & Typical Cul-de-sac)	11-7
Improvements Standards for Streets	11-8
Issuance of Site Disturbance Permit	11-9
Construction, Testing and Inspection of Streets	11-10
Sidewalks	11-11
Water Connections	11-12
Sewer Connections	11-13
Special Provisions	11-14

ARTICLE XII

Establishment of Districts

General Provisions	12-1
List of Zoning Districts	12-2
Residential Districts	12-3
Business Districts	12-4
Commercial/Industrial District	12-5
Outdoor Amusement District	12-6
Golf Course District	12-7

ARTICLE XIII

District Requirements

General	13-1
Table of Permitted Uses –Defined	13-2
Compliance with District Requirements	13-3
Requirements for Lot Area, Width, Coverage, Density Height & Other Factors	13-4
Requirements for Lot Area, Width, Coverage, Density Height & Other Factors for Public and Semi-Public Buildings	13-5
Minimum Zoning District Setback Requirements & Illustrations	13-6
Performance Standards for Non-residential Districts	13-7
Fixed Dwellings	13-8
Minimum Requirements for Fixed Dwellings	13-9
Requirements for Lot Area, Width, Coverage, Density Height & Other Factors for Outdoor Amusement Districts	13-10
Requirements for Lot Area, Width, Coverage, Density Height & Other Factors for Golf Course Districts	13-11

ARTICLE XIV

The Olde Towne Daphne District

Purpose	14-1
Uses Permitted	14-2
Special Provisions	14-3
Site Plan Application	14-4
Waiver	14-5
Bond Requirement for Off-Site Impacts	14-6
Fees & Application Withdrawal Procedures	14-7
Issuance of Site Disturbance Permit	14-8
Issuance of Building Permit	14-9
Parking Requirements	14-10
Signage	14-11
Sidewalks	14-12
Landscape Standards	14-13
Supervision	14-14
Certificate of Occupancy	14-15
Penalties	14-16
Setbacks	14-17
Maximum Building Height	14-18
Drainage	14-19
District Map (Exhibit B)	14-20

ARTICLE XV

Procedures for Site Plan Review

Use and Applicability	15-1
Pre-Application & Pre-Construction Conferences	15-2
Master Plan Submittal	15-3
Special Provisions	15-4
Site Plan Application	15-5
Waiver	15-6
Issuance of Site Disturbance Permit	15-7
Bond Requirement for Off-Site Impacts	15-8
Release of Bond	15-9
Issuance of Building Permit	15-10
Fees & Application Withdrawal Procedures	15-11

ARTICLE XVI

Parking Requirements for All Districts

General	16-1
Parking Schedule	16-2
Design Standards	16-3

ARTICLE XVII

Procedures for Subdivision Review

Pre-Application & Pre-Construction Conferences 17-1
Master Plan Submittal 17-2
Preliminary Plat Application 17-3
Final Plat Application 17-4

ARTICLE XVIII
Drainage and Storm Water Management Facilities and Erosion/Sediment Control
General 18-1
Drainage and Stormwater Management Engineering Plan Contents 18-2
Drainage & Stormwater Management 18-3
Stormwater Management Facility Design 18-4
Verification of Adequate Design, Easements and Maintenance 18-5
Erosion and Sediment Control 18-6
Completion of Construction Activities, Final Inspection, and/or Certificate of Occupancy Requests 18-7

ARTICLE XIX
Landscape Standards and Tree Protection
Purpose 19-1
Applicability and Use 19-2
Landscape Standards 19-3
Protection of Significant Trees 19-4
Tree Protection Zone 19-5
Permitting Procedures 19-6
Planting Requirements 19-7
Greenbelt Zones 19-8
Buffer Zone Requirements 19-9
Off-Street Parking Facilities 19-10
Special Designs 19-11
Retention or Detention Ponds in Common Areas 19-12
Supervision 19-13
Certificate of Occupancy 19-14
Maintenance 19-15
Penalties 19-16

ARTICLE XX
Coastal Protection
Purpose 20-1
Statutory Authority 20-2
Finding of Fact 20-3
Objectives 20-4
Usage 20-5
Words and Terms Defined 20-6
Lands Covered 20-7
Basis for Establishing the Coastal Area 20-8
Permit Required 20-9

Compliance 20-10
Abrogation and Greater Restrictions 20-11
Interpretation 20-12
Warning and Disclaimer of Liability 20-13
Monitoring and Enforcement 20-14
Administration 20-15
Permit Procedures 20-16
Variance 20-17
Specific Provisions 20-18

ARTICLE XXI
The Board of Zoning Adjustment
Authority 21-1
Procedure 21-2
Limitation, Withdrawal, Citizen Appeals 21-3
Fees 21-4

ARTICLE XXII
Zoning Amendment
Procedure 22-1
Reversionary Clause 22-2
Fees 22-3

ARTICLE XXIII
Annexation
Procedure 23-1
Procedure for Zoning Newly Annexed Land 23-2
Fees 23-3

ARTICLE XXIV
Vacation of Easement and/or Right-of-Way
Procedure 24-1
Fees 24-2

ARTICLE XXV
Mobile Home Park Provisions
General 25-1
Application 25-2
Plan 25-3
Minimum Requirements 25-4
Minimum Lot and Structure Requirements 25-5
License 25-6
Application for License 25-7
Posting of License and Temporary Permit 25-8
Revocation of License 25-9
Fees 25-10

ARTICLE XXVI
Manufactured Home Provisions
General 26-1
License 26-2
Compliance 26-3
Compatibility 26-4
Minimum Requirements 26-5

ARTICLE XXVII
Recreational Vehicle Park Provisions
General 27-1
Minimum Requirements 27-2

ARTICLE XXVIII
Fixed Dwelling Provisions
Minimum Provisions 28-1

ARTICLE XXIX
Innovative Design Provisions
General 29-1

ARTICLE XXX
Planned Unit Development Provisions
General 30-1
Types of Developments 30-2
General Regulations 30-3
Development Regulations 30-4
Uses Permitted 30-5
Other Requirements 30-6
Review Procedure 30-7
Application Procedure 30-8

ARTICLE XXXI
Home Occupations, Automobile Service Stations, Cemeteries,
Bed & Breakfast Establishments and Extended Stay Hotel Facilities
Home Occupations 31-1
Automobile Service Stations 31-2
Cemeteries 31-3
Bed & Breakfast Establishments 31-4
Extended Stay Hotel Facilities 31-5

ARTICLE XXXII

Telecommunication Tower Provisions

Purpose	32-1
Definitions	32-2
Procedures and Standards	32-3

ARTICLE XXXIII

Sign Provisions

Purpose	33-1
General Provisions	33-2
Special Provisions	33-3
Nonconforming Signs	33-4
Signs for Which No Permit is Required	33-5
Signs Prohibited in All Districts	33-6
Maintenance and Removal of Signs	33-7
Traffic Control Devices on Private Property	33-8
Municipal Identification or Directional Signage	33-9
Permitted Signs	33-10
Schedule of Permitted Signs Requirements	33-11
Fees	33-12

ARTICLE XXXIV

Schedule of Fees	34-1

ARTICLE XXXV

Table of Permitted Uses

Definitions	35-1
List of Districts & Cross Reference for R-4 Designation	35-2
Permitted Uses & Conditions	35-3
Permitted Outdoor Amusement Uses	35-4
Permitted Golf Course Uses	35-5

ARTICLE XXXVI

The Village Overlay District

Purpose	36-1
Uses Permitted	36-2
Special Provisions	36-3
Plan Content	36-4
Waiver	36-5
Fees	36-6
Issuance of Site Disturbance Permit	36-7
Issuance of Building Permit	36-8

Parking Requirements 36-9
Signage 36-10
Sidewalks 36-11
Landscape Standards 36-12
Supervision 36-13
Certificate of Occupancy 36-14
Penalties 36-15
Setbacks 36-16
Maximum Building Height 36-17
Drainage 36-18
Subdivision Regulations 36-19
District Map 36-20
Exhibit C

ARTICLE XXXVII
The Eastern Shore Park Overlay District
Creation of District 37-1
Minimum Street Requirements 37-2
Improvement Standards 37-3
Issuance of Site Disturbance Permit 37-4
Inspection of Improvement 37-5
Sidewalks 37-6
Water and Sewer Connections 37-7
Special Provisions 37-8
District Requirements 37-9
Procedures for Site Plan Review 37-10
Parking Requirements for Overlay District 37-11
Subdivision Regulations 37-12
Drainage and Erosion Control Requirements 37-13
Landscape and Tree Protection 37-14
Sign Provisions 37-15
District Map (Exhibit D) 37-16

ARTICLE XXXVIII
Residential High Rise Condominium Development District
Purpose 38-1
Height Exceptions 38-2
Setbacks 38-3
Additional Requirements 38-4
Water and Sewer Connection 38-5
Sign Provisions 38-6
Parking 38-7
Sidewalks 38-8
Traffic Impact Analysis 38-9
Environmental Compatibility 38-10
District Map (Exhibit E) 38-11

ARTICLE XXXIX

Jubilee Retail Overlay District

General Provisions	39-1
District Requirements	39-2
Improvement Standards	39-3
Minimum Street Requirements	39-4
Sidewalk & Pedestrian Walkways	39-5
Water & Sewer Connections	39-6
Drainage & Erosion Control Requirements	39-7
Special Provisions	39-8
Commencement of Construction or Site Disturbance	39-9
Final Inspection of Improvements	39-10
Subdivision Regulations	39-11
Procedures for Site Review	39-12
Parking Requirements for Overlay District	39-13
Landscape and Tree Protection	39-14
Off-Street Parking Facilities	39-15
Sign Provisions	39-16
District Map (Exhibit F)	39-17

ARTICLE XXXX

Self Service Vending Units

Purpose & Applicability	40-1
Words & Terms Defined	40-2
Prohibited Districts	40-3
Permitted Districts	40-4
Site Plan Application	40-5
Standards	40-6
Signs	40-7
Landscaping	40-8
Parking	40-9
Access	40-10
Waste Disposal	40-11
Maximum Building Area	40-12
Legal Nonconforming Self Service Vending Unit Status	40-13
Structural Alteration, Abandonment, Discontinuation, Relocation or Replacement	40-14
Loss of Legal Nonconforming Status	40-15

ARTICLE XXXXI Intentionally Left Blank
ARTICLE XXXXII Intentionally Left Blank
ARTICLE XXXXIII Intentionally Left Blank
ARTICLE XXXXIV Intentionally Left Blank

ARTICLE XXXXV

Adoption

Grandfather Clause	45-1
Conflict with Other Laws	45-2
Validity	45-3
Repeal of Regulations and Ordinances	45-4
Disclaimer of Liability	45-5
Effective Date	45-6
Penalties and Remedies	45-7

THE FOLLOWING ARE PROVIDED SEPARATE FROM THIS DOCUMENT

Original documents shall be obtained from the Department of Community Development prior to submittal.

APPENDIX G: SUPPLEMENTAL DEPARTMENTAL APPLICATIONS

APPENDIX H: ZONING DISTRICT MAP

Exhibit A

APPENDIX H-2: OFFICIAL STREET MAP

Exhibit A-2

APPENDIX I: THE OLD TOWNE DAPHNE DISTRICT MAP

Exhibit B

APPENDIX J: THE VILLAGE OVERLAY DISTRICT MAP

Exhibit C

APPENDIX K: THE EASTERN SHORE OVERLAY DISTRICT MAP

Exhibit D

APPENDIX L: THE RESIDENTIAL HIGH RISE DEVELOPMENT DISTRICT MAP

Exhibit E

APPENDIX M: JUBILEE RETAIL OVERLAY DISTRICT MAP

Exhibit F

APPENDIX N: WELL HEAD PROTECTION AREA

Exhibit G

THE CITY OF DAPHNE

LAND USE
AND
DEVELOPMENT ORDINANCE

Prepared by
The City of Daphne
Department of Community Development
Post Office Box 400
Daphne, Alabama 36526

ARTICLE I
PURPOSE, REPEALS, ENACTMENT AND SHORT TITLE

1-1 PURPOSE

The City of Daphne, Alabama, pursuant to the authority granted by Title 11, Subtitle 2, Chapter 52, Articles 1 through 4, Code of Alabama, 1975 and 1986 Cumulative Supplement, in order to promote the health, safety, convenience, order, prosperity, and general welfare of the residents; to lessen congestion in the street; to secure safety from fire, panic, and other dangers; to provide adequate light and air; to prevent the overcrowding of land, to avoid undue concentration of population; to facilitate the adequate provision of transportation, water, sewerage, and parks; to facilitate initiation of the Comprehensive Plan, and other public requirements, hereby ordains and enacts into law an official Land Use and Development Ordinance in accordance with the laws of Alabama. In their interpretation and application, the provisions of this Ordinance shall be:

(a) Considered as minimum requirements.

(b) Liberally construed in favor of the governing body.

(c) Deemed to neither limit nor repeal any other powers granted under state statutes.

1-2 REPEALS AND ENACTMENT

An Ordinance of the City of Daphne establishing rules and regulations for zoning, platting, and subdividing land which rules and regulations define the legal authority; classify land; establish zoning districts requirements; prescribe procedures for plat review; set standards and specifications for streets, utilities, and other public improvements in subdivisions; and, prescribe methods for enforcement, exceptions, and amendments.

1-3 SHORT TITLE

This Ordinance shall be known and may be cited as the "Land Use and Development Ordinance" for the City of Daphne.

ARTICLE II
LEGAL STATUS

2-1 AUTHORITY

The rules and regulations set forth herein are hereby adopted in accordance with Title 11, Subtitle 2, Chapter 52, Articles 1 through 4 of the Code of Alabama, 1975, (as amended), and 1986 Cumulative Supplement are as follows:

(a) Zoning:
Zoning authority is specifically contained in Title 11, Subtitle 2, Chapter 52, Articles 1 and 4 of the Code of Alabama, 1975, (as amended), and 1986 Cumulative Supplement.

(b) Subdivisions:
Subdivision authority is specifically contained in Title 11, Subtitle 2, Chapter 52, Articles 1, 2, and 3 of the Code of Alabama, 1975, (as amended), and 1986 Cumulative Supplement.

2-2 JURISDICTION

(a) Zoning:
This Ordinance shall be in force and effect for zoning purposes within the corporate limits of the City of Daphne as presently or hereinafter established.

(b) Subdivisions:
This Ordinance shall be in force and effect for the subdivision of all land which is situated inside the corporate limits of the City of Daphne, as well as, all land which lies in the extraterritorial planning jurisdiction of the City of Daphne, as presently or hereinafter established.

ARTICLE III
OFFICIAL PLANS AND MAPS

3-1 IMPLEMENTATION

This Ordinance shall be implemented in accordance with the Comprehensive Plan. A copy of the plan is filed in the office of the City Clerk and Zoning Administrator and/or Director of Community Development.

3-2 FUTURE LAND USE MAP

The Future Land Use Map as contained in the Comprehensive Plan shall serve as a guide for the future development of Daphne. To the extent practical, it shall be followed in the administration of this Ordinance.

3-3 OFFICIAL ZONING DISTRICT MAP

The Future Land Use Map as contained in the Comprehensive Plan, as well as all official maps, are to be utilized and construed only as visual aids for the City and/or any of its Departments, agencies, or Commissions in the furtherance of City duties and goals and are not solely to be relied upon by any party.

The Zoning District Map, Exhibit A, the latest edition, is hereby adopted and made a part of this Ordinance. It shall be filed in the office of the Zoning Administrator and/or Director of Community Development and the City Clerk to show thereon the date of adoption of said Ordinance. All Official maps shall be used as a tool in determining the permissible use of land. Zoning should always be verified by Zoning Administrator or Director of Community Development.

3-4 AMENDMENTS TO THE OFFICIAL ZONING DISTRICT MAP

If, in accordance with the provisions herein, revisions are made in the zoning district boundaries or any other information portrayed on the Zoning District Map, changes shall be made on the Map immediately following the amendment and upon approval of the City Council. Unauthorized alterations to Zoning District Map shall be considered a violation of this Ordinance and subject to penalties as prescribed herein.

3-5 FILE OF PROPERTIES REZONED, VARIANCES GRANTED, SUBDIVISIONS APPROVED

The Zoning Administrator and/or Director of Community Development shall maintain a file or registry of properties rezoned, variances granted, and subdivisions approved under the authority of this Ordinance in conjunction with all pertinent requirements and/or conditions thereto.

3-6 OFFICIAL OLDE TOWNE DISTRICT MAP

The Olde Towne District Map, Exhibit B, the latest edition, is hereby adopted and made a part of this Ordinance. This map shall be signed by the Mayor and attested by the City Clerk. It shall be filed in the office of the Zoning Administrator and/or Director of Community Development and the City Clerk to show thereon the date of adoption of said Ordinance.

3-7 AMENDMENTS TO THE OFFICIAL OLDE TOWNE DISTRICT MAP

If, in accordance with the provisions herein, revisions are made in the district boundaries or any other information portrayed on the Olde Towne District Map, changes shall be made on the Map immediately following the amendment and upon approval of the City Council. Unauthorized alterations to the Olde Towne District Map shall be considered a violation of this Ordinance and subject to penalties as prescribed herein.

3-8 OTHER OFFICIAL MAPS

The Official Street Map, Exhibit A-2, the latest edition, is hereby adopted and made a part of this Ordinance. The Village Overlay District Map, Exhibit C, the latest edition, is hereby adopted and made a part of this Ordinance. The Official Eastern Shore District Overlay Map, Exhibit D, the latest edition, is hereby adopted and made a part of this Ordinance. The Residential High Rise District Boundary Map, Exhibit E, latest edition, is hereby adopted and made a part of this Ordinance. The Jubilee Retail Overlay District Map, Exhibit F, latest edition, is hereby adopted and made a part of this Ordinance.

3-9 AMENDMENTS TO THE OFFICIAL MAPS

If, in accordance with the provisions herein, revisions are made in the zoning district boundaries or any other information portrayed on the Village Overlay District Map, the Official Eastern Shore District Overlay Map, or the Official Street Map, the Residential High Rise District Boundary Map or the Jubilee Retail Overlay District Map, changes shall be made on the individual map immediately following the amendment and upon Official Maps shall be considered a violation of this Ordinance and subject to penalties as prescribed herein.

ARTICLE IV

Intentionally left blank

ARTICLE V
DUTIES AND POWERS OF THE PLANNING COMMISSION

5-1 AUTHORITY

The duties and powers of the Planning Commission shall include, but are not limited to the following:

(a) Shall be the function and duty of the Commission to make and adopt a master plan for the physical development of the municipality, including any areas outside of its boundaries which in the Commission's judgment bear relation to the planning of such municipality.

(b) Shall be charged with the responsibility to review, apply, and monitor the enforcement of this Ordinance in accordance with the Comprehensive Plan or portions thereof which are adopted. It shall be part of the duties of the Commission to consult with and advise public officials, agencies, public utility companies, civic, educational, professional and other organizations, and citizens with relation to the protection and implementation of the plan.

(c) Shall hear and take action on all matters which require Planning Commission "approval" as specified herein.

(d) Shall render decisions on uses not provided for in the Table of Permitted Uses.

(e) Shall hear and recommend to the City Council on all matters of zoning, rezoning, and zoning of newly annexed properties when an R-1, Low Density Single Family Residential, district, is determined by the Planning Commission not to be the proper zone, petitions for acceptance of road right-of-way, vacation of easement or vacation of right-of-way.

(f) Shall, from time to time, recommend to the appropriate public officials programs for public structures and improvements, and for the financing thereof.

(g) Shall review and approve construction of a street, park, public way, open space, public building or structure, or public utility, whether publicly or privately owned, authorized in the municipality, planned section, or district for location, character, and extent thereof.

(h) Shall hear and provide interpretations regarding the Land Use & Development Ordinance, except where such authority is specifically granted to the Board of Zoning Adjustment herein or by the Code of Alabama; or where such authority is specifically granted to the City Council by this Ordinance or by the Code of Alabama.

An application presented for review to the Planning Commission shall adhere to the requirements otherwise provided herein and as may be established by the Commission for the lawful rendering of its duty.

In general, the Planning Commission shall have such powers as may be necessary to enable it to fulfill its functions, promote municipal planning, or to carry out the purposes of this chapter.

ARTICLE VI
PROCEDURES FOR THE TRANSACTION OF BUSINESS

6-1 IMPLEMENTING AUTHORITY

The Planning Commission shall be the implementing authority for this Ordinance, except where required by law, action of the City Council is necessary. Such deliberative action of the City Council shall take place after due consideration of recommendations made to it by the Planning Commission.

6-2 PUBLIC HEARINGS

When the Planning Commission must hold a public hearing on any matter where its action is decisive, due notice shall be given as required by law. A sign shall be posted upon properties which by law require public notice. When the City Council must hold a public hearing on any matter recommended by the Planning Commission, the Planning Commission may dispense with a separate hearing and submit its recommendation to the appropriate body. The public notice of such hearing by the City Council shall be published or posted by the City Clerk immediately upon receipt of the recommendation from the Department of Community Development regarding the date, time, and place of said hearing.

6-3 RULES

"Robert's Rules of Order" shall normally govern the order of business and conduct of meetings of the Planning Commission or any committee of said Commission.

6-4 MEETINGS

The Planning Commission shall hold at least one (1) regular scheduled meeting per month. The date, time, and place of such meeting shall be determined by the Planning Commission. All meetings are governed by the Alabama Open Meetings Act 2005- 40.

Special meetings of the Planning Commission may be called by the Chairman upon giving a forty-eight (48) hour notice to the members.

6-5 AGENDA

An agenda shall be prepared by the Planning Coordinator in concert with the Director of Community Development and the Planning Commission Chairman for each meeting of the Planning Commission.

6-6 QUORUM

Unless otherwise provided by statute, a majority of the members shall constitute a quorum for the conduct of business. An affirmative vote of not less than six (6) members shall be required for approval of a comprehensive plan amendment, zoning amendment, annexation, and preliminary subdivision plat, pursuant to Section 11-52-10, the Code of Alabama, 1975, (as amended)**.** The approval of a final subdivision plat shall require the majority vote of the quorum present and voting, pursuant to Attorney General Opinion 2000-171.

6-7 APPLICATIONS

Applications for zoning amendments, annexation, vacation of easement and/or right-of-way, subdivision plats, site plans, or recommendations with regard to the development of land shall be filed and handled in accordance with the provisions outlined herein.

6-8 STUDY—ADDITIONAL REVIEW PERIOD

For any matter formally presented at a regular meeting, with the exception of a subdivision plat, the Planning Commission may defer action until the next regular meeting thereon so additional study of the matter may be made. As required by law, the Planning Commission shall act to approve or disapprove a subdivision plat within thirty (30) days after its formal submission. However, with the applicant's consent to waive the thirty (30) day rule, the Planning Commission may delay action on said plat until the next regularly scheduled meeting.

6-9 SIGNATURES

The Chairman or in the event of his/her absence, the Vice-Chairman or the Secretary shall be the person(s) authorized to sign documents testifying to action taken by the Planning Commission.

6-10 INTERPRETATIONS/MEDIATIONS

In accordance with *Article 5, Duties and Powers of the Planning Commission, Section 5-1(h), Authority*, requests for interpretation with regard to wording or intent of this Ordinance, or mediation of a dispute between an applicant and an administrator in regard to an approved site plan or subdivision plat shall be delivered to Community Development by the owner or authorized representative no less than sixteen (16) calendar days prior to the regularly scheduled meeting of the Planning Commission. The Director of Community Development shall provide initial review of request. Upon issuance of an unfavorable recommendation in regard to the interpretation or mediation, the Director of Community Development shall forward said dispute to the Planning Commission

for determination. Any request for interpretation shall specify applicable Ordinance reference (article, section, subsection, etc). Planning Commission vote shall be by majority of quorum present. Planning Commission interpretation or mediation may be appealed to the Board of Zoning Adjustment in accordance with the provisions of *Article 21, Establishment of the Board of Zoning Adjustment.*

6-11 PUBLIC NOTICE SIGNS

This section intends to promote adequate public awareness of proposed changes to the use of real property in Daphne city limits. Pursuant to this purpose, applicants requesting site plan review, master plan review, preliminary/final, and/or preliminary subdivision plat, shall be responsible for posting a sign as provided by Community Development or in accordance with specifications provided thereby. Requests for plan review, master plan review, preliminary/final and/or preliminary subdivision plat shall not be placed upon the Planning Commission Regular Meeting Agenda if the public notice sign is not properly sited on the property subject to such application. Signs shall be placed no later than fifteen (15) calendar days prior to Planning Commission review. Any application not placed on the Planning Commission regular meeting agenda for the above cause, shall be withheld until the next review cycle. Upon compliance with this and all other applicable requirements, the application will be placed upon the agenda. Failure to comply within forty-five days of the original application submittal shall result in forfeiture of applicable application fees and rejection of the application by Community Development Director.

The Public Notice Sign, shall not be an advertisement sign for the proposed project, but an advertisement of the Planning Commission meeting dates and times in accordance with the standards established for such provided in Appendix G, Supplemental Information.

No preliminary subdivision plat or preliminary/final subdivision plat application shall be considered “formally submitted” until such time that the public notice sign is properly placed and all other applicable provisions provided within the Land Use & Development Ordinance are met.

ARTICLE VII
BUILDING OFFICIAL

7-1 AUTHORITY

The Building Official shall be designated by the Mayor and the duties shall be as follows:

(a) Is authorized and empowered on behalf and in the name of the City Council to administer and enforce the provisions of this Ordinance to include receiving applications, inspecting premises, and issuing Certificates of Occupancy for uses and structures which are in conformance with the provisions as outlined herein.

(b) Does not have the authority to take final action on applications, matters involving variances, or other exceptions which this Ordinance has reserved for action by the Board of Zoning Adjustment, the Planning Commission and/or the City Council.

(c) Shall keep records of all permits, the Certificates of Occupancy issued, maps, plats, and other documents with notations of all special conditions. He shall file and safely keep copies of all sketches and plans submitted. The same shall form a part of the records of his office and shall become public record.

(d) Is authorized by Ordinance 2007-29, as amended from time to time, to administer the Flood Prevention Ordinance.

7-2 PERMITS AND CERTIFICATES

Permits and certificates shall be issued in accordance with the following provisions:

(a) Building Permits:

It shall be unlawful to commence the excavation for or the construction of any building or other structure, including accessory structures, to store building materials or erect temporary field offices, to commence the moving, alteration, or repair of any structure, including accessory structures, until the Building Official has issued a building permit including a statement that the plans, specifications, and intended use of such structure in all respects conform with the provision of this Ordinance. Application for the building permit shall be made to the Building Official on the prescribed forms provided for that purpose.

(b) Approval of Building Plans and Issuance of Building Permits:

It shall be unlawful for the Building Official to approve any building plans or issue a building permit for construction until he/she has reviewed the plans in detail and found them to be in conformity with this Ordinance.

To this end, the Building Official shall require every application for a building permit for construction, use of land, moving, or alteration be accompanied by a plan or plat drawn to scale and showing sufficient detail to enable the Building Official to ascertain whether the proposed construction, use of land, moving, or alteration is in conformance with this Ordinance. Such plan or plat shall include, as a minimum the following:

(1) The actual shape, proportion, and dimension of the lot to be built upon.

(2) The shape, size, location, and intended use of all buildings or other structures to be erected, altered, moved, or existing on the lot.

(3) The existing and intended use of all such buildings or other structures.

If the proposed excavation, construction, moving, or alterations as set forth in the application are in conformity with the provisions as provided herein, the Building Official shall issue a building permit accordingly.

(c) Disapproval of a Building Permit:

If an application for a building permit is not approved, the Building Official shall state in writing the cause for such disapproval. Issuance of a building permit shall in no case be construed as waiving any provision nor of any legal liability for noncompliance with the provisions of this Ordinance on the part of the building, owner, or applicant.

(d) Certificate of Occupancy:

No land, building, other structure or part thereof hereafter erected, moved or altered in its use shall be used until the Building Official shall have issued a Certificate of Occupancy stating such land, structure, or part thereof is found to be in conformity with the provisions of this Ordinance.

Within three (3) business days after the owner or his agent has notified the Building Official that a building, premises, or part thereof is ready for occupancy or use, it shall be the duty of the Building Official to make a

final inspection thereof, and to issue a Certificate of Occupancy if the building, premises, or part thereof is found to be in conformance with the provisions of this Ordinance, or if such certificate is refused, the Building Official shall state the refusal in writing with the cause thereof.

7-3 CONTINUANCE OF PREVIOUSLY ISSUED PERMITS

Active permits previously issued shall not be affected by the provisions of this Ordinance, except as otherwise provided herein.

7-4 REFERENCE TO TECHNICAL CODE

International Building Code of the City of Daphne was adopted by city ordinance number 2007-23.

ARTICLE VIII

DEFINITION OF TERMS

8-1 USAGE

a. Except as otherwise provided herein, all words shall have the customary dictionary meaning.

b. The present tense includes the future tense and the future tense includes the present tense.

c. The singular number includes the plural and the plural includes the singular.

d. The word “herein” means “in these regulations”.

e. The terms “this Ordinance”, “regulations”, or “these regulations” mean the “Land Use and Development Ordinance of the City of Daphne, Alabama”.

f. The word “person” includes an individual, as well as a firm, corporation, association, incorporated association of persons such as a club, company, organization, trust, partnership or other legal entity.

g. The word “lot” includes “plot” or “parcel”.

h. The word “structure” shall include the word “building”, and “building” shall include “structure”; and, the words “building” or “structure” includes any part thereof.

i. The word “shall” is always mandatory.

j. The word “may” is always discretionary.

k. The word “used”, “used for”, or “occupied” as applied to any land or buildings shall be construed to include the words “intended, arranged, or designed to be used, designated to be used or occupied”.

l. The words "zoning map" mean the Official Zoning District Map of the City of Daphne.

m. The terms “Council”, “Commission”, and “Board” shall mean the “Daphne City Council”, “City of Daphne Planning Commission”, and “City of Daphne Board of Zoning Adjustment,” respectively, unless otherwise indicated.

n. “The New Illustrated Book of Development Definitions” latest addition by Harvey S. Moskowitz and Carl G. Lindbloom shall be adopted as a reference and shall become a part of the Land Use and Development Ordinance ***as an expansion of the Definition of Terms not contained in this Article.***

8-2 WORDS AND TERMS DEFINED

As used in this Ordinance, the following words and terms shall have the meaning defined:

1. Abandoned Sign. A sign advertising an activity, product, or business no longer conducted or located on the premises upon which the sign is located.

2. Abutting/Contiguous Property. Any real property that is immediately adjacent to, touching, or immediately across any road, easement, or public right-of-way from the property in question.

3. Accessory Structure. A detached subordinate structure, the use of which is customarily incidental to that of the principal structure and which is located on the same parcel or lot as the principal structure.

4. Accessory Structure Compound. A fenced, secured enclosure in which a wireless telecommunications facility and its equipment, buildings, access roads, parking area and other accessory devices/auxiliary structures are located.

5. Accessory Use. A use of land or buildings which is normally incidental, subordinate to and related exclusively to the principal use of the premises.

6. Adjacent. Either abutting or on opposite sides of a thoroughfare or right-of-way that separates it from the subject property. However, properties separated by a freeway or railroad R.O.W shall not be considered “adjacent”.

7. Advertisement. The calling of a service, product, or activity to the attention of the public, including identifying such service, product, or activity.

8. Agriculture. The use of land for farming, dairying, pasturage, agriculture, horticulture, floriculture, viticulture, and animal poultry husbandry and the necessary accessory uses for packing, treating, or storing the produce; provided, however, the operation of any such accessory uses shall be secondary to that of normal agricultural activities and provided further the above uses shall not include the commercial feeding of garbage or offal to swine or other animals.

9. Alley. A public street which affords only a secondary means of access to abutting property and not intended for general traffic circulation.

10. Alter, Alteration, Altered. These terms shall include any changes in structural parts, stairways, type of construction, kind of class of occupancy, light or ventilation, means of ingress and egress, or other changes affecting or regulated by the Building Code or this Ordinance, including extension or expansion, except for minor changes or repairs not involving the aforesaid features.

11. Alternative Support Structure. Any structure other than a wireless telecommunications tower, which may include, but is not limited to, buildings, water towers, light poles, power poles, telephone poles, and other essential public utility structures.

12. Antenna. An electromagnetic device which conducts radio signals, through an attached cable or waveguide, to or from a radio transmitter or receiver. Typically this includes "whips," "cornucopia horns," "panels," and parabolic "dishes."

13. Antenna Support Structure. Any structure on which telecommunications antennas and cabling can be attached. Typically this includes steel towers with guy-wires (guyed towers); wooden, steel or concrete single poles (monopoles); self-supporting steel towers with three or four "legs" (self-supporting/lattice towers); rooftops of existing buildings or structures (such as elevated water storage tanks). (See Also Tower).

14. Aquifer. A layer of permeable rock, sand, or gravel through which ground water flows, containing enough water to supply wells and springs.

15. Architect. A professional architect licensed in the State of Alabama.

16. Arterial Street. A street designed or utilized primarily for high speed vehicular movements and heavy volumes of traffic.

17. Assisted Living Facility. A licensed facility in which room, board, meals, laundry, and assistance with personal care and other services are provided for not less than twenty-four (24) hours in any week to a minimum of two (2) ambulatory adults not related by blood or marriage to the owner and/or administrator.

18. Atrium. An open area within a building surrounded on all four sides by the building walls and open and unobstructed from the first floor level to the roof or sky except as otherwise provided herein.

19. Automobile Repair. The repair, rebuilding or reconditioning of motor vehicles or parts thereof, including collision service, painting, and steam cleaning of vehicles.

20. Automobile Wrecking. The dismantling or wrecking of used motor vehicles, mobile homes, trailers, or the storage, sale or dumping of dismantled, partially dismantled, obsolete or wrecked vehicles or their parts.

21. Awning. Detachable frame work covered by cloth or other light materials, supported from the walls of a building for protection from sun or weather.

22. Bank, Stream or Creek. The terrain alongside the bed of a river, creek, or stream.

23. Banner. Any sign of lightweight fabric or similar material that is mounted to a pole or a building at one or more edges.

24. Base Flood. The flood having a one percent (1%) chance of being equaled or exceeded in any given year.

25. Basement. A story all or partly underground but having at least one-half of its height below the average level of the adjoining ground.

26. Beach Shelter. An accessory structure, temporary or permanent, consisting of one or more columns and a roof, not including walls or permanent facilities of any type. Placement of a beach shelter shall be subject to the regulations of the Coastal Area Management Program.

27. Bed and Breakfast. The renting of rooms in a private residence for brief periods of time together with the provision of breakfast for the guests by the home owner in an establishment having one to three guest rooms which are subordinate and incidental to the main, owner occupied, single family residential use. All service is to be provided by the home owner.

28. Berm. A planted or landscaped elevated ground area between two other areas, generally designed to restrict view and to deflect or absorb noise. Berms with ground cover that necessitates moving shall have a slope not greater than one (1) ft of rise per three (3) ft of run.

29. Best Management Practice (BMPs). Permanent or temporary structural practices and vegetative measures which, when properly designated, installed and maintained by property owners or contractors, provide erosion and sedimentation control for rainfall events. The result of which is to reduce non-point source inputs to receiving waters in order to achieve water quality protection goals.

30. Biochemical Oxygen Demand or BOD5. A measure of the organic strengths of wastes in wastewater/sewage.

31. Bio-retention. An engineered process which manages stormwater runoff, using the chemical, biological and physical properties afforded by a natural, terrestrial-based community of plants, microbes and soil. Bio-retention provides water quantity (flood) controls and improves water quality through removal of pollutants and nutrients associated with runoff.

32. Billboard. An off-premises or off-site sign advertising an establishment, merchandise, product, service, or entertainment which is not sold, provided, manufactured, or furnished on the property on which said sign is located.

33. Block. A piece or parcel of land entirely surrounded by public highways or streets, other than alleys.

34. Board of Zoning Adjustment or Board. A board appointed by the Daphne City Council as authorized by state statute to hear and decide appeals, special exceptions and variances

from the terms of the Land Use and Development Ordinance. Also known as the BZA or Board of Adjustment.

35. Boarding House. A building or part thereof, other than a hotel, motel, or restaurant, where meals and/or lodging are provided for compensation, where no cooking or dining facilities are provided in individual rooms.

36. Boat Repair. Major overhauling or repair of small craft and pleasure boats that requires open air, partially covered or enclosed dry dock facilities and such heavy equipment, yard space, and dock facilities as may be necessary.

37. Buffer. Land which is maintained in either a natural or landscaped state and is used to screen and/or mitigate the impacts of incompatible development on surrounding areas, properties or rights-of-way. Buffers may include berms, shrubs, trees, fences or walls, other screening devices, or a combination of such devices as required by *Article 19, Landscape and Tree Protection.*

38. Buildable Area. The portion of a lot remaining after required yards have been provided.

39. Buildable Area, Net. The total horizontal area of a parcel, in square feet, less the area of any waterway, less the area of any wetlands, less the area of any submerged lands, less any conservation easements, and less the area required for setbacks. For the purposes of computing net buildable area all waterways, wetlands, submerged lands, conservation easements and setback area square footage shall be rounded up to the next highest whole number.

40. Building. Any structure attached to the ground and intended for shelter, housing or enclosure for persons, animals, or chattels.

41. Building, Accessory. A subordinate building, the use of which is incidental to that of the principal use of the main building.

42. Building, Alterations. Any change in the supporting members of a building (such as bearing walls, beams, columns, and girders) except such change as may be required for its safety; any addition to a building; any changes in use resulting from moving a building from one location to another.

43. Building Area. The portion of a lot or tract of land occupied by the principal building, including porches, carports, accessory buildings, and other structures.

44. Building Code. The International Building Code published by the International Code Council, Inc., as adopted by the City of Daphne, and amended from time to time.

45. Building Coverage. The percent of total lot area covered by buildings and structures but excluding roof overhangs, unenclosed balconies, and unenclosed walkways which do not project more than six (6) feet from the exterior walls of a building or from walls

enclosing an atrium.

46. Building Face or Wall. All window and wall area of a building in one plane or elevation.

47. Building Height. The vertical extent of a structure measured (in feet) from the average elevation of the finished grade surrounding the structure to the highest point of the structure. The highest point of the structure will vary with the type of roof as follows: The vertical distance from the finished grade of the highest roof beams on a flat or shed roof, to the deck level or a mansard roof ; and the average distance between the eaves and ridge level for gable, hip and gambrel roofs.

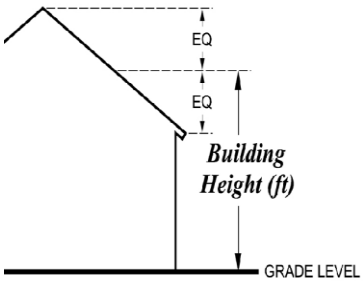

Building Height

In a V-zone, building height will be measured from the Bottom of the lowest supporting girder.

48. Building Line. The extreme overall dimensions of a building as staked on the ground, including porches, chimneys, and similar projections at grade level, whichever is nearest to the property line. The front building line shall refer to that portion of the building nearest the front lot line.

49. Building Official. Individual or designee thereof appointed by the City of Daphne to carry out inspections required by the Building Code, latest edition.

50. Building Permit. A permit issued by the Building Official which allows construction, moving, alteration or repair of a building or structure including accessory structures and the placement of temporary field offices.

51. Building, Principal. A building in which is conducted the main or principal use of the lot or parcel for which said building is situated. A principal building shall be a permanent building which has a roof supported by columns or walls which completely enclose the principal building area.

52. Build-to Line or Setback Line. A line parallel to the front lot line, which establishes the maximum setback allowed within the applicable district. Example: A build-to line of twenty feet (20 ft) requires that the front building line can be no less than twenty (20) feet from the front lot line. A corner lot shall be considered to have two such build-to-lines in applicable districts.

53. Bulk. Height and percentage of land coverage of a building.

54. Bulkhead. A structure separating land and water areas, primarily designed to resist earth pressures.

55. Business/Commercial Center. A group of two or more owners, occupants or tenants with

common customer and employee parking provided onsite, and/or connected together by common walls, interior aisles or malls.

56. Business/Office Park. A planned development of one or more office(s) and/or business(es) in a park-like setting.

57. Cabana. An accessory structure usually used in connection with outdoor bathing or recreation providing enclosed space for showering or changing clothes, with recreational cooking and/or bar facilities including storage facilities, but no sleeping rooms.

58. Caliper. The diameter of a tree trunk measured in inches. Caliper determines the minimum size of trees planted to fulfill this ordinance.

59. Camp Site. A development for the accommodation of tourists or vacationers on a short-term basis, providing rental spaces for each individual trailer, camper, motor home, recreation, and service facilities for the use of the tenants.

60. Canopy. A detachable, roof-like cover, supported from the ground, or deck or floor of a building, and from the walls of a building, for protection from sun or weather.

61. Carport. An accessory structure having a roof with one or more open sides and intended for the sheltering of motor vehicles.

62. Cemetery. Land used or intended to be used for the burial of the human and animal dead and dedicated for cemetery purposes, including crematories, mausoleums, and mortuaries if operated in connection with and within the boundaries of such cemetery.

63. Central Sewer System. All equipment and property involved in the operation of a sanitary sewer utility, including waste water lines and appurtenances, pumping stations, treatment works, disposal facilities, and general property necessary for the operation of such utility, which shall be fully installed, operable, and providing service in compliance with applicable Alabama laws and regulations.

64. Central Water System. All of the equipment and property involved in the operation of a water utility, including water lines and appurtenances, pumping stations, treatment works, disposal facilities, and general property necessary for the operation of such utility, which shall be fully installed, operable, and providing service in compliance with applicable Alabama laws and regulations.

65. Certificate of Occupancy. Official certification that a premise conforms to provisions of the Zoning Ordinance and Building Code, and may be used or occupied. Such certificate is granted for new construction or for the substantial alteration or additions to existing structures. A structure may not be occupied unless such certificate is issued by the Building Official.

66. Change of Occupancy. The term "change of occupancy" shall mean a discontinuance of

an existing use and the substitution therefore of a use of a different kind or class. Change of occupancy is not intended to include a change of tenants or proprietors unless accompanied by a change in the type of use.

67. Channel. A natural or artificial water course of perceptible extent, with bed and banks to confine and conduct continuously or periodically flowing water.

68. Channel Letters or Open Letter Sign. A sign consisting of a logo or symbol, individual letters or connected lettering mounted on a building in a raceway or similar mounting or on the surface of an integral architectural element, which is a part of the building. Individual letters may be illuminated. The display area of an open letter sign shall not exceed the maximum permitted area for building signs on the property.

69. Child Development Facility. Any child development program or club that promotes extended educational services that is funded partially or completely by federal, state, or local government revenue. (i.e.: Head Start Programs, Boys and Girls Clubs, etc.). The definition of "child development facility" shall also include any day care center licensed by the Alabama Department of Human Resources.

70. City. The City of Daphne.

71. City Council. The chief legislative body of the City of Daphne.

72. City Engineer. The individual or entity hired to provide engineering services for the City of Daphne.

73. Clearing. An activity wherein vegetative or existing hard surface cover is removed.

74. Clinic. A place used for the care, diagnosis and treatment of sick, ailing, infirm, injured persons, and those who are in need of medical or surgical attention, but who are not provided with board.

75. Club. A building or portion thereof or premises owned or operated for a social, literary, political, educational, or recreational purpose primarily for the exclusive use of members and their guests.

76. Club, Private. Any association or organization of a fraternal or social character not operated or maintained for profit. This does not include casinos, night clubs, or other institutions operated for a profit.

77. Coastal Area. The coastal waters, including the lands therein and thereunder, and the adjacent shore lands, including the waters therein and thereunder, strongly influenced by each and in proximity to the shorelines of Alabama and including transitional and intertidal areas, salt marshes, wetlands, and beaches within the jurisdiction of Alabama. They extend inland to a point approximately ten (10) feet above mean sea level, and shall include all lands and waters between that point and mean high tide.

78. Coastal Bluff. A naturally formed precipitous landform located along Mobile Bay and generally has a gradient of at least two hundred (200) percent one to two (1:2) slope with a vertical elevation of at least ten (10) feet. These bluffs may be within or adjacent to the Coastal Area.

79. Coastal Resources. Valuable human, natural, cultural or historical assets within the coastal area, such as water quality, air quality, wetlands and submerged grass bed, beaches and dunes, wildlife habitats, biological resources, cultural resources, public access areas, and water resources.

80. Co-location. The placement of more than one wireless communications antenna by one or more telecommunications service providers on a single existing or new antenna support structure.

81. Collector Street. A street which carries medium volumes of traffic collected primarily from minor streets and delivered to arterial streets.

82. Commercial Vehicle. Any vehicle designed and used for transportation of people, goods, or things, other than private passenger vehicles and trailers for private nonprofit transport of goods and boats.

83. Commission. The City of Daphne Planning Commission.

84. Common Grounds. An area of development shared by all owners and managed by either the subdivider/developer or a home/property owner's association. This area may include recreation facilities, stormwater management area, buffers and other landscaped areas as designated by plat or site plan.

85. Common Areas. Land within a development, owned by the developer or the property owners or home owner's association, that is designed and intended for the common benefit of the residents and that may include complementary drainage structures, landscaping, community signs and improvements, etc. Ownership of common areas shall be delineated in restrictive covenants and noted the record plat. The City of Daphne shall not be responsible for the maintenance of any residential common areas.

86. Common Open Space, Informal. Areas designated for undisturbed natural features, including wetlands, rock outcrops, pastoral areas, floodplains, lakes, streams, rivers, and wildlife habitat; utility and conservation easements; used for passive recreation uses including walking trails, pathways, and picnic areas.

87. Common Open Space, Formal. Formal open space is a generally planned and structured area that includes formally designed landscape plantings. The space is regularly maintained and may include streetscape furnishings (e.g., benches, lighting, and sculptures), recreational improvements (e.g., playground, swimming pool, tennis courts), and street improvements at the least.

88. Comprehensive Plan. The Community Development Plan including land use, housing, public facilities and other plan elements currently in use by the City of Daphne.

89. Concealed Towers. Communication towers on developed property disguised to appear as either a part of the structure housing, a principal use, or an accessory structure which is normally associated with the principal use occupying the property. Concealed towers developed on unimproved property must be disguised to blend in with the existing vegetation. Ex. monopine.

90. Concealment Techniques. Design techniques used to blend a wireless telecommunications facility, including any antennas thereon, unobtrusively into the existing surroundings so as to not have the appearance of a wireless telecommunications facility. Such structures shall be considered wireless telecommunications facilities and not spires, belfries, cupolas, or other appurtenances usually required to be placed above the roof level for purposes of applying height such as building bulk, massing, and architectural treatment of both the wireless telecommunications facility and surrounding development.

91. Condominium. A building, or group of buildings, in which residential dwelling units, offices or floor area that are owned individually, and the structure, common areas, and facilities are owned by all the owners on a proportional, undivided basis.

92. Condominium, High Rise. A condominium containing eight (8) but not exceeding sixteen (16) stories in which dwelling units, offices, or floor area are owned individually and the structures, common area and facilities are owned by all owners or a proportional, undivided basis. Underground parking facilities are not counted in the height; however, ground level parking beneath the building shall be counted as a story.

93. Condominium, Mid-Rise. A condominium containing three to seven stories. Underground parking facilities are not counted in the height; however, ground level parking beneath the building shall be counted as a story.

94. Conservation Easement. An encumbrance — sometimes including a transfer of usage rights (easement) — which creates a legally enforceable land preservation agreement between a landowner and a government agency (municipality, county, state, federal) or a qualified land protection organization (often called a "land trust"), for the purposes of conservation. It restricts real estate development, commercial and industrial uses, and certain other activities on a property to a mutually agreed upon level. The property remains the private property of the landowner.

95. Conservation Subdivision. A subdivision of single-family detached dwellings, wherein portions of the site containing environmental features are left substantially undeveloped for preservation and/or recreation but where the developer may otherwise build the maximum number of lots permissible under the base zoning district for the entire site by clustering such dwellings on the portion(s) of the site not containing said environmental

features. *Refer to Article 29, Innovative Design Provisions*.

96. Construction Site Identification Sign. A temporary sign located on the site of a construction project which identifies the owners, architects, engineers, contractors, mechanics, artisans, craftsmen, financial institutions, and other individuals or firms involved with the construction, but does not include any advertisement of any product, service, or activity, except that such sign may include information regarding sale or leasing, and words announcing the name or character of the building enterprise or the purpose for which the building is intended.

97. Contiguous. See "abutting".

98. Convalescent or Nursing Home. A building, or portion thereof, wherein for compensation, living accommodations and care are provided for persons suffering from illness, other than mental or contagious, which is not of sufficient severity to require hospitalization, or for persons requiring further institutional care after being discharged from a hospital other than a mental hospital; including extended care facilities.

99. Convenience Store. A retail establishment which offers the retail sales of an assortment of container food items (snacks, grocery items), refrigerated food items stored in display coolers, tobaccos, toiletries, accessory items, and other convenience items; and which may offer the sale of beer and wine, but not liquor, in unopened containers, for off-site consumption, as an accessory part of the principal establishment being retail sales of other products; and which may or may not include the sale of automotive fuels dispensed by the purchaser, but not including bays, other than drive-through car washes, for automobile service or repair.

100. Crown. The branches and leaves of a tree or shrub with the associated upper trunk.

101. Cul-de-sac. The dead-end street terminated by a vehicle turnaround area.

102. Cultural Resources. Any district, building, site, object or other material in American history, architecture, archaeology, or culture which is of national, state, or local significance.

103. Curb and Curb Line. The inside vertical faces of a masonry curb, the center line of a valley gutter, or the edge of the pavement where no curb or gutters exist.

104. D.B.H. or Diameter at Breast Height. -The diameter of a tree trunk measured in inches at a height of four and one half, (4-1/2) ft above the ground. If a tree splits into multiple trunks below four and one-half (4-1/2) ft, then the trunk is measured at its most narrow point beneath the split.

105. Day Care Center. A facility for the day care and instruction of young or elderly persons not remaining overnight, licensed and regulated by the Alabama Department of Human Resources, receiving thirteen (13) or more children or elderly persons for care during all

or part of the day. The term does not include: programs operated as part of public or private schools; programs operated on federal governmental premises; and special activities programs such as athletics, crafts, and similar activities conducted on an organized and periodic basis by civic, charitable and governmental organizations.

106. Day Care, Home Family. A child care facility, licensed and regulated by the Alabama Department of Human Resources, within a single-family dwelling, which receives on a regular basis not more than six (6) children for care during part of the day.

107. Day Care, Home Group. A child care facility, licensed and regulated by the Alabama Department of Human Resources, within a single-family dwelling, which receives on a regular basis at least seven (7) but no more than twelve (12) children for care during part of the day, has at least two (2) adults present and supervising the activities.

108. Deciduous Plants. Plants that shed their leaves during their dormant season and produce new leaves the following growing season.

109. Deck. A flat covered or uncovered area generally adjoining a house, building or pool, and which may be used as an outdoor sitting or recreation area.

110. Dedication. The deliberate assignation of land by its owner(s) for any general or public use(s), reserving to himself no other rights than such as being compatible with the full exercise and enjoyment of the public use(s) to which the property has been devoted.

111. Degrade. To affect the coastal area in such a manner as to produce a continuing reduction of destruction of present levels of coastal resources.

112. Density. The number of dwelling units per acre of land.

(a) Gross Density - the number of dwelling units per acre of the total area of land to be developed.

(b) Maximum Density - the density allowable in a given zoning district not otherwise limited by other applicable requirements of this Ordinance.

(c) Net Density - the number of dwelling units per acre of land when the acreage involved includes only the land devoted to residential uses.

113. Detention, Underground. Detention storage located in underground pipe systems or vaults designed to provide water quantity control through detention and/or extended detention of stormwater runoff.

114. Detention Basin. An artificial flow control structure that is used to contain flood water for a limited period of time.

115. Development. Any manmade change to improved or unimproved real estate including

but not limited to buildings or other structures, mining, dredging, filling, grading, paving, excavating, or drilling operations. Agricultural activities such as plowing or cultivating and gardening activities are not included in this definition of development.

116. Development permit. A permit required for any development activity in the City of Daphne that requires a building permit, and/or land disturbance permit. (See also Permit.)

117. Differential runoff. The difference in rate and volume of stormwater runoff from a parcel or project in its undeveloped natural condition and its developed condition.

118. Dirt pit. An open land area, surface mine, or excavation site used for the removal of sand, gravel, or fill dirt for sale or for use off-premise.

119. District. A section of the area zoned, within which the zoning regulations are uniform.

120. Drip line. The circumference of a tree's natural unaltered canopy extended vertically to the ground.

121. Driveway. A vehicular access, or curb cut, in private ownership intended for use by vehicles entering or leaving an off-street parking area.

122. Drive-In Restaurant. A restaurant or public eating business so conducted that food, meals, or refreshments are brought to the motor vehicles for consumption by the customer or patron.

123. Dredging. Removal or excavation of any materials from lands underlying coastal waters.

124. Dry Well. A cavity of sufficient size, filled to the surface with compacted rocks to allow water storage capacity.

125. Dwelling or Dwelling Unit. Any building, portion thereof, or other enclosed space or area used as or intended for use as the home of one family, with separate cooking and housekeeping facilities, either permanently or temporarily, but not including units in hotels or other structures designed for transient residence.

(a) Multiple Family - a building or structure designed, arranged or used for residential occupancy by three (3) or more families, with or without common or separate kitchen or dining facilities, including apartment houses, apartment hotels, rooming houses, boarding houses, fraternities, sororities, dormitories, row houses, town houses, and similar housing types, but not including hotels, motels, hospitals, or nursing homes.

(b) Multiple Family, Garden Apartments. One or more two or three story, multi-family structures containing 8 to 20 dwelling units and including related off-street parking,

open space and recreation facilities, and not exceeding fifty (50) feet in height. Structures shall not exceed 200 feet in length. Access may be from a common hall or individual entrance. Dwelling units may be located back to back, adjacent, and on top of one another.

(c) Single Family - a detached building designed for and occupied by one family as a home, with cooking and housekeeping facilities.

(d) Town House – Single Family. A one family dwelling with ground floor outside access, attached to three or no more than five, one family dwellings by common vertical fire resistant walls without openings, and not exceeding two and one half (2 ½) stories or thirty-five (35) feet in height. (See also Definition of Building Height).

(e) Two Family, Duplex. A building designed and arranged to provide sleeping, cooking and kitchen accommodations and toilet facilities for occupancy by two (2) families living independently of each other, the structure having two (2) dwelling units. The dwellings are totally separated from each other by an unpierced wall extending from basement to roof, and does not exceed two and one-half (2 ½) stories or thirty-five (35) feet in height.

126. Earthwork. The breaking of ground, except common gardening and grounds care.

127. Easement. A grant by a property owner of the use of land for a specific purpose or purposes by the general public or a corporation or a certain person or persons. Such uses and reasons may include drainage, utilities, telecommunications, access, ingress or egress. Such easements may be temporary or may be attached to the property in perpetuity.

128. Engineer or Applicant's Design Engineer. A professional engineer licensed in the State of Alabama.

129. Erect. Construct, including built, reconstruction, alteration, moved upon or any physical operations on the premises required for the building, principal structure, sign or accessory structure or use. Excavation, earthwork, fill, drainage work, utilities installations and other work as it relates to the construction or use of a building, principal structure, sign or accessory use shall be considered within the meaning of erect.

130. Erected. The word "erected" includes built, constructed, reconstructed, moved upon or any physical operations on the premises required for building. Excavations fill drainage, and the like shall be considered a part of erection.

131. Erosion Control Plan**.** Measures which prevent and/or minimize the wearing away of land, sediment or rock caused by stormwater run-off.

132. Essential Services. Public utility facilities related to water, stormwater sewers, sanitary sewers, solid waste disposal, telephone, cable television, gas and electrical collection or distribution systems serving the City of Daphne; but not including buildings housing employees, or public safety facilities such as fire and/or police stations.

133. Establishment. A commercial, industrial, institutional, educational, office, business, or financial entity.

134. Exception. Relief of design standards on non-zoning requirements in the ordinance by the Planning Commission. Exceptions often refer to design standards such as cul-de-sac length, location and type of improvements, and landscaping requirements. They are dictated by the circumstances related to the specific application that makes the design requirement for which the exception is requested unnecessary or unreasonable. *A waiver of zoning requirements usually requires a variance.*

135. Existing Facilities. Facilities which may cause or threaten to cause environmental pollution within a well field's recharge area which include, but are not limited to facilities with underground storage tanks (U.S.T) facilities with hazardous waste permits granted by ADEM.

136. Expansion, Building or Use. The addition of enclosed or unenclosed rooms or storage spaces, porches, or parking area, to an existing building or use on a parcel of land.

137. Extended Stay Hotel Facility. A building or structure under a single management that provides no fewer than five (5) rental room or suite units intended primarily as short term lodging accommodations for public rental on a daily, weekly, or other short term basis for registered guests.

138. Family. One or more persons related by blood, adoption or marriage occupying a single dwelling unit and using common cooking facilities.

139. Fill. All soil or other solid material added to any land surface during site development.

140. Fill Activity. To use fill in order to provide support, establish an even grade.

141. Filling Station. (See Service Station).

142. Final Plat. The completed PUD or subdivision plat with appropriate official signatures in form for approval and recording in the Office of the Probate Judge of Baldwin County, Alabama.

143. Financial Guarantee. A financial surety submitted to the City of Daphne by a property owner/developer to assure that minimum improvements will be installed.

144. First Flush. The initial inch of surface runoff of a rainstorm.

145. Fixed Dwelling. A dwelling unit (or structure containing several units) attached to a permanent foundation.

146. Flood or Flooding. A general and temporary condition of partial or complete inundation of normally dry land areas not ordinarily covered by water from either the overflow of inland or tidal waters; or the unusual and rapid accumulation or runoff of surface waters from any source.

147. Flood Frequency. The average frequency statistically determined, for which it is expected that a specific flood level may be equaled or exceeded.

148. Flood Plain. Any land area susceptible to flooding. Those areas defined by the U.S. Geological Survey or the U.S. Army Corps of Engineers as subject to flooding once in one hundred (100) years, based on topography.

149. Flood Proofing. Any combination of structural or non-structural additions, changes, or adjustments which reduces or eliminates flood damage to real estate, improved real property, water supply and sanitary sewer facilities, electrical systems, and structures and their contents.

150. Flood Prone Area. Any area subject to inundation by the regulatory flood.

151. Floodway. The channel of a watercourse and the adjacent land areas that must be reserved in order to discharge the base flood without cumulatively increasing the water surface more than one foot. For the purpose of these regulations, floodways shall be defined as follows:

    (a) The floodways as identified or delineated in the Flood Insurance Study for Baldwin County, Alabama.

    (b) Along small streams and watercourses, all lands lying within 25 feet of the top of the bank of the channel (measured horizontally), unless the developer demonstrates to the satisfaction of the Planning Commission that a lesser distance (but not less than fifteen (15) feet) is adequate based on the watershed characteristics and probable storm runoff for the base flood.

152. Floodway, Regulatory Floodway. The channel of a river or other watercourse and the adjacent land areas that must be reserved in order to discharge the base flood without cumulatively increasing the water surface elevation more than one (1) foot.

153. Floor Area, Gross. The sum of the gross enclosed horizontal area of all the floors of a building, except a basement or area under the first habitable story, measured from the exterior faces of exterior walls and/or supporting columns.

154. Food Processing. The preparation, storage, or processing of food products on a large scale. Examples of these activities include bakeries, dairies, canneries, and other

similar activities or businesses.

155. Frontage, Building. The outside wall surface of a building or of an enclosed porch on a building that is nearest to the front lot line, or, in the case of a wall surface not parallel to the front lot lines, the average of the longest and shortest distance of the wall from the front lot line.

156. Garage, Commercial. A building or portion thereof used for equipping, servicing, repairing, rental, selling and/or storage of self-propelled motor vehicles. Gasoline, oil, grease, batteries, tires and motor vehicle accessories may be supplied and dispensed at retail.

157. Garage, Private. A building or part thereof designed and/or used for inside parking of self-propelled private passenger vehicles by the occupants of the house or other principal structure on the premises or by the occupants of or employees of a particular firm.

158. Garage, Public. A building or part thereof designed or used for indoor or partially indoor (covered) parking of self-propelled private passenger vehicles, operated as a commercial enterprise, accessory to a commercial enterprise, or as a governmental service and providing only incidental services for such vehicles.

159. Gas Station. Any building, structure or land at which the sale of combustible and flammable fuels is conducted. Gas stations which also have motor vehicle repair services as a component of the business shall be considered "gas/service stations".

160. Golf Course. A tract of land for playing golf, improved with tees, greens, fairways, hazards, and which may include clubhouses and shelters. Included would be executive or par three golf courses. Specifically excluded would be independent driving ranges and any miniature golf course.

161. Grade Level. For buildings, the average level of the finished grade at the front building line. For detached signs, the lower of (1) existing, average grade at the sign edge prior to construction or (2) the newly established average grade at the sign edge after construction, exclusive of any filling, berming, mounding, or excavating solely for the purpose of locating the sign. For trees, landscaping, and light fixtures, the level of finished grade at the base of the tree, plant, or fixture.

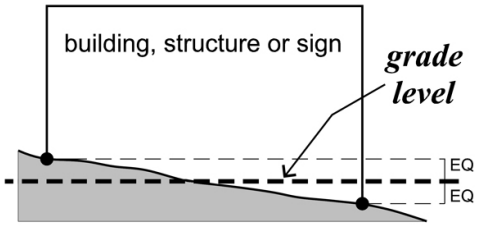

162. Grading. Excavation or fill of material, including the resulting conditions thereof.

163. Green Space. An area of land covered in grass or other vegetation or a natural water feature. Uses in green space may include stormwater areas, wooded slopes, graded and re-vegetated slopes, required yards on both residential and non-residential lots, landscaped areas, and other land covered in vegetation.

164. Grinder Pump. A mechanical waste management device that shreds solids and raises sewage to a higher elevation through pressure sewers and pumps it to the central sewer system.

165. Group Development. A development comprising two or more structures built on a single lot, tract or parcel of land and designed for occupancy by separate families, firms, businesses, or other enterprises.

166. H2S or Hydrogen Sulfide Gas. A toxic and corrosive gas with a highly offensive smell produced in wastewater and sanitary sewer collection systems.

167. Habitable Rooms. All living spaces within a dwelling unit (house, apartment, townhouse, condominium, mobile home) arranged in such a fashion as to be commonly described as kitchen, dining room, living room, dinette, family room, den, music room, library, bedroom and/or any other partitioned area that is designed to be used, or that may be used, in the opinion of the governing body, as a room for the carrying on of general family activities.

168. Height of Building. (See Building, Height).

169. Height of Telecommunications Tower. When referring to a tower or other structure, the distance measured from the ground level at the base of the tower to the highest point on the tower or structure, including if said highest point is an antenna placed on a structure or tower.

170. Home Owner's Association (or Property Owner's Association). An incorporated, nonprofit organization operating under recorded land agreements through which, (a) each lot and/or homeowner in a planned or other described land area is automatically a member, and (b) each lot is automatically subject to a charge for a proportionate share of the expenses for the organization's activities, such as maintaining a common property, and, (c) the charge if unpaid becomes a lien against the property.

171. Home Occupation. Any occupation for gain or support customarily conducted entirely within a dwelling and carried on solely by the inhabitant thereof, and which use is clearly incidental and secondary to the use of the dwelling for dwelling purposes, and does not change the character thereof.

172. Home Owners Association or Property Owners Association (HOA or POA). A legal entity created by a real estate developer for the purpose of developing, managing and

selling a development of homes. It allows the developer to exit financial and legal responsibility of the community, typically by transferring ownership of the association to the homeowners or property owners after selling off a predetermined number of lots.

173. Hotel. A transient commercial lodging establishment consisting of one or more buildings used for this purpose, including accessory uses such as eating and drinking facilities, recreation facilities and parking. This category includes motels and motor hotels. Lodgings may consist of sleeping rooms only or may include cooking facilities also, but are not intended for long-term occupancy.

174. Hotels can generally be classified as limited service or full service. Limited-service hotels provide only lodgings and do not provide any restaurant or food service, recreation facilities and the like. Full-service hotels always have restaurants and possibly a bar or lounge with entertainment, personal services, health club, and retail stores. (See also Extended Stay Hotel Facility Definition).

175. Illicit Discharges. Any discharge to the municipal separate storm sewer system that is not composed entirely of stormwater, except for discharges allowed under a NPDES permit or waters used for firefighting operations.

176. Improvement. Any permanent structure that becomes part of, placed upon, or is affixed to real estate.

177. Institution or Institutional. A nonprofit organization building, or use, publicly or privately owned, for the benefit of the public (schools, churches, temples, hospitals, clubs, fire stations, police stations, sewerage lift pumps, libraries, museums, City offices, etc.).

178. Jurisdictional Wetland. See Wetland, Jurisdictional.

179. Junk Yard. Place, structure or lot where junk, waste, discarded, salvaged, or similar materials such as old metals, wood, slush, lumber, glass, paper, rags, cloth, bagging, cordage, barrels, containers, etc. are bought, sold, exchanged, baled, packed, disassembled, or handled, including auto wrecking yards, used lumber yards, house-wrecking yards, and yards or places for storage or handling of salvaged house wrecking and structural steel materials.

    This definition shall not include pawn shops and establishments for the sale, purchase, or storage of usable secondhand cars, salvaged machinery, used furniture, radios, stoves, refrigerators or similar household goods and appliances. Nor shall it apply to the processing of used, discarded, or salvaged materials as part of manufacturing operations.

180. Kennel. Any place or premises where four or more dogs over four months of age are kept.

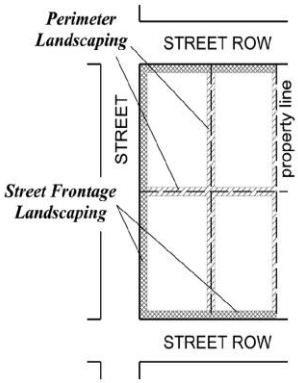

181. Landscaping. Trees, shrubs, ground covers, vines, walkways, ponds, fountains, benches, sculptures, and similar materials used for creating an attractive appearance. No artificial plants, trees or like materials may be counted toward meeting the landscaping requirements of this Ordinance.

182. Landscaping, Foundation. Those landscape areas provided against the front of the principal structure.

183. Landscaping, Interior. Those landscape areas provided within an off street parking area.

184. Landscaping, Perimeter. Those landscape areas provided between an off street parking area and adjoining properties. Perimeter landscaping shall exclude landscaping between an off-street parking area and buildings on the same legal lot.

185. Landscape Plan. A component of a development plan on which is shown proposed landscape species, such as number, spacing, size at time of planting, and planting details; proposals for protection of existing vegetation during and after construction; proposed treatment of hard and soft surfaces; proposed decorative features; grade changes; buffers and screening devices.

186. LEED-certified. A rating system developed by the U.S. Green Building Council. The rating system provides guidelines and standards for environmentally sustainable construction.

187. Licensee. Any person licensed to operate and maintain a mobile home park under the provisions of this Ordinance.

188. Lodging. Transient or short term living accommodations provided by a hotel, motel, extended stay hotel facility, or bed and breakfast facility or through the short term rental of a dwelling unit.

189. Logo. A recognizable and distinctive graphic design, stylized name, unique symbol, or any other device used for identifying any organization, commercial entity and/or business. A logo shall be construed as a sign and shall count towards the number of signs allowed and the maximum applicable square footage requirements. In this ordinance, a logo does not refer to brand-identification of products or goods.

190. Lot. A piece, parcel, or plot of land occupied or intended to be occupied by one main building, accessory buildings, uses customarily incidental to such main buildings and such open spaces as are provided in this Ordinance, or as are intended to be used with such piece, parcel, or plot of land and having its principal frontage upon an existing or proposed right-of-way conforming to the requirements of this Ordinance.

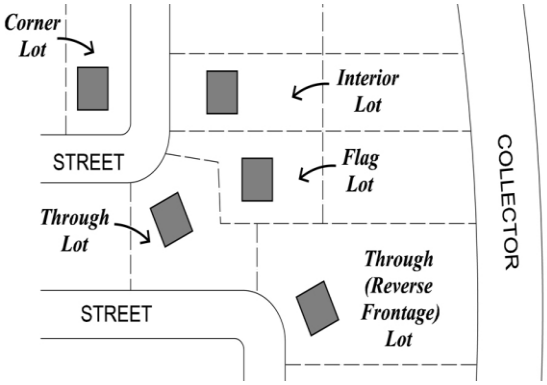

(a) Lot, Corner. A lot abutting upon two (2) or more streets at their intersection or upon two (2) parts of a street which form an interior angle of less than one hundred thirty-five (135) degrees. The point of intersection of the street lines is the corner. On corner lots the front yard shall be considered as parallel to the street upon which the lot has its least dimension. On all corner lots the rear yard shall be at the opposite end of the lot from the front yard. On corner lots, the side yard shall be considered as parallel to the street upon which the lot has its greatest dimension.

(b) Lot, Flag. A flag lot is a lot with two distinct parts: 1. The flag, which is the only building site; and is located behind another lot; and 2. The staff, which connects the flag to the street; provides the only street frontage for the lot; and at any point is less than the minimum lot width for the zone.

(c) Lot, Interior. A lot other than a corner lot.

(d) Double Frontage or Through Lot. A lot or plot, ~~but~~ not a corner lot, that abuts upon two parallel streets, the two frontages being noncontiguous.

191. Lot of Record. A lot which is a part of a recorded plat or a plot described by metes and bounds, the map and/or description of which has been recorded according to Alabama law.

192. Lot Line. The lot line which abuts a street or separates the lot from a street.

(a) Lot Line, Front. The lot line contiguous to the street right-of-way line of the principal street on which the lot abuts.

(b) Lot Line, Rear. The lot line opposite to and most distant from the front lot line.

(c) Lot Line, Side. Any lot line other than a front or rear lot line.

i. A side lot line of a corner lot separating a lot from a street is called a side street lot line.

ii. A side lot line separating a lot from another lot is called an interior lot line.

193. Street Line. The property on the side of a street between two intersecting streets (crossing or terminating), or if the street is dead ended, then all the property abutting on one side between an intersecting street and the dead end of the street.

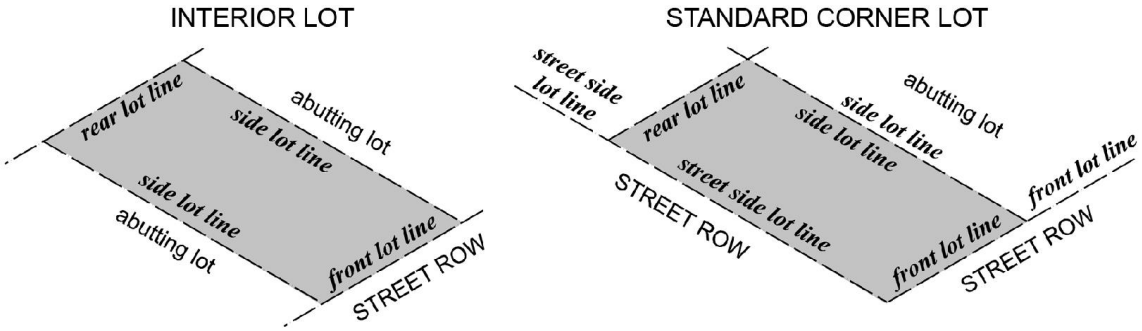

Lot Lines of Typical Lots

194. Lot Depth. The mean (average) horizontal distance between the front and rear lot lines, measured at right angles to the street lines.

195. Lot Width. The mean (average) horizontal distance between the side lot lines, measured at right angles to the lot depth, with the minimum to comply with this code to be measured at the front setback line.

196. Low Impact Development.

197. Maintenance and Storage Facilities. Land, buildings, and structures devoted primarily to the maintenance and storage of construction equipment and material.

198. Mall. Any concentration of two (2) or more retail stores and/or service establishments which share customer parking areas and is located within an enclosure having public walkways whereby a customer in one (1) store or establishment may walk to another store or establishment without leaving the enclosure.

199. Maneuvering Space. The space entirely on private property required for maneuvering vehicles into and out of spaces in such a manner as to preclude the backing of any vehicle into any street right-of-way.

200. Manufactured Home. A structure constructed in accordance with the National Manufactured Housing Construction and Safety Standards Act of 1974 as amended, U.S.C. 5401. Motor homes, house trailers, travel trailers, campers, mobile homes, mobile homes made to HUD standards and similar towed, transported, or self-propelled units are not manufactured homes.

201. Manufacturing, Extractive. Any mining, quarrying, excavating, processing, storing, separating, cleaning, marketing or any mineral natural resource.

202. Manufacturing, General. Manufacturing, processing, assembling, storing, testing, and similar industrial uses which are generally major operations and extensive in character; require large sites, open storage and service areas, extensive services and facilities, ready access to regional transportation and normally generate some nuisances such as smoke, noise, vibration, dust, glare, air pollution, and water pollution, but not beyond the zoning district boundary.

203. Manufacturing, Light. Manufacturing or other industrial uses which are usually controlled operations; relatively clean, quiet, and free of objectionable or hazardous elements such as smoke, noise, odor, or dust; operating and storing within enclosed structures; and, generating little industrial traffic and no nuisances.

204. Marina. A harbor or boat basin providing moorage, docking facilities, supplies and minor services for pleasure boats.

205. Marina, Full Service. A place for docking pleasure boats or providing services to pleasure boats and the occupants thereof, including minor servicing and minor repair to boats while in the water, sale of fuel and supplies, water, electricity and sewer services, and the provision of lodging, food, beverages, and entertainment as accessory uses. Dry boat storage may also be provided, but not major boat repair. A yacht club shall be considered as a marina, but a hotel, or similar use, where docking of boats and provision of services thereto is incidental to other activities, shall not be considered a marina, nor shall boat docks accessory to a multi-family structure where no boat related services are rendered.

206. Marquee. Any permanent roof-like structure projecting beyond a building or extending along and projecting beyond the wall of the building, designed and constructed to provide protection from the weather.

207. Mini-warehouse. A building or group of buildings in a controlled access compound that contain varying sizes of individual, compartmentalized, and controlled-access stalls, cubicles and/or lockers used for storage only.

208. Mixed-Use. A zoning district which allows the combination of high density residential use with a commercial use. A mixed use building may include retail stores on the first floor and offices and/or apartments on the upper floors.

209. Mobile Home. Any vehicle or similar portable structure having been constructed with wheels (whether or not such wheels have been removed) and capable of being towed on a public street and so constructed as to permit occupancy for dwelling or sleeping purposes.

210. Mobile Home Park. A residential development on a parcel of land in one ownership providing rental spaces for two (2) or more mobile homes on a long-term basis, with recreation and service facilities for the tenants, whether or not a charge is made for such accommodation.

211. Mobile Home Space. A plot of ground within a mobile home park designed for the accommodation of one (1) mobile home or travel trailer.

211. Mobile Home Subdivision. A residential development designed for the accommodation of mobile homes on individually-owned lots or in condominium or cooperative ownership, including recreation and open space areas held in common ownership, but not including developments serving tourist or vacation-oriented travel, motor homes, campers, etc.

212. Monopine. A communication tower of such design and treated with architectural material so camouflaged to resemble a woody tree with a single trunk and branches on its upper part.

213. Motel, Motor Hotel. An establishment providing sleeping accommodations for transients. Traditionally, the motel (motor hotel) are one or two-story accommodation catering to the automobile traveling public, with a majority of all rooms having direct access to the outside without the necessity of passing through the main lobby of the building. Rentals range across the entire economic spectrum, multistory structures are common and motels may offer a full range of services, including restaurants, meeting rooms, entertainment, and recreational facilities.

214. Multi-Use Building. A building containing two or more distinct commercial uses.

215. Net Buildable Area (see Buildable Area (Net)).

216. Net Residential Acreage. Land used or proposed to be used for the placement of dwelling units and their accessory uses, private open spaces, parking areas, etc. Does not include streets or public recreation or open spaces or stormwater management facilities.

217. Nightclub. A restaurant, dining room, bars, or other similar establishment providing food or refreshments wherein floor shows or other forms of entertainment by persons are provided for guests.

218. North American Vertical Datum of 1988 or NAVD 88. The vertical control datum of orthometric height established for vertical control surveying in the United States of America based upon the General Adjustment of the North American Datum of 1988.

219. Nonconforming Use. A use of land existing lawfully at the time of the enactment of this Ordinance, or at the time of a zoning amendment and which does not conform with the regulations of the district in which it is located.

220. Nuisance. Any use or result thereof which would cause noise, smoke, gas, vibration, fumes, dust or other objectionable conditions which would have a negative impact on City of Daphne.

221. Nursing Home. A home for aged, chronically ill, or incurable persons in which three or

more persons not of the immediate family are received, kept, or provided with food and shelter or care for compensation, but not including hospitals, clinics, or similar institutions devoted primarily to the diagnosis and treatment of the sick or injured.

222. Nursery, Plant Materials. Land, building, structure, or combination thereof for the storage, cultivation, transplanting of live trees, shrubs, or plants offered for wholesale or retail sale on the premises including products used for gardening or landscaping.

223. Nursery School. A place for the day care and instruction of children not remaining overnight; includes day care centers.

224. Offices. Space or rooms used for professional, administrative, clerical, and similar uses.

225. Open House. A house in which a selling agent is present and the house is offered for sale to the general public.

226. Open Letter Sign. A sign consisting of a logo or symbol, individual letters or connected lettering mounted on a building in a raceway or similar mounting or on the surface of an integral architectural element, which is a part of the building. Individual letters may be illuminated. The display area of an open letter sign shall not exceed the maximum permitted area for building signs on the property.

227. Open Space. Land, not covered by parking areas, rights-of-way or buildings other than recreational structures, which is landscaped or left in a natural state as required within this Ordinance or the Subdivision Regulations and which is intended for natural or scenic preservation and/or passive recreational uses. The area may include, along with the natural environmental features, swimming pools, tennis courts or any other recreational facilities. Streets, structures for habitation, and the like shall not be included.

228. Open Space, Common. Land area within a planned development held in common ownership and maintained by a property owners or homeowners or condominium association of all of the residents for recreation, protection of natural features, amenities or buffers; is freely accessible to all residents/owners of the development; and is protected by covenant and the provisions of this Ordinance to ensure that it remains in such use(s). For the purposes of calculation, common open space shall not include surface water bodies nor land occupied by common driveways, parking areas, or rights-of-way; nor shall it include areas within lots for single-family dwellings or duplexes. Common open spaces shall be left in a natural state or landscaped, and may include recreational structures. Formal or informal open space used for active or passive recreational uses or resource protection purposes and not including the minimum lot area required for any housing type or street right-of-way.

229. Open Space Lot. A single lot or group of lots intended to contain formal or informal open space areas.

230. Outdoor Amusement Use or Facility. A public, private, or semi-private property which is used exclusively for recreational and amusement purposes, generally these activities are not enclosed within a building.

231. Overlay Zone. A zoning district that encompasses one or more underlying zones that imposes additional requirements above that required by the underlying zone.

232. Parking Space, Off-street. For the purpose of this Ordinance, an off-street parking space shall consist of an area adequate for parking an automobile with room for opening doors on both sides, together with properly related access to a public street or alley and maneuvering room, but shall be totally outside of any street or alley right-of-way.

233. Permanently Stabilized. The state of any disturbed area that once a practice is implemented for stabilization, it shall be resistant to erosion.

234. Permanent Vegetation. Plant growth that is sufficient in controlling erosion and remains without essential change throughout the year.

235. Permit. Any written authorization by a duly appointed City of Daphne representative for an individual, firm, trust, partnership, association or corporation to undertake activities related to subdivisions, zoning, PUD's, land use, building or other actions permitted in this Ordinance or by other City of Daphne authorization.

236. Permit, Active. A permit issued through the Building Department that work has commenced within one hundred and eighty (180) days of issuance and the proposed work has not been suspended for more than 180 days after commencing or any permit issued by the Department of Community Development which has not expired.

237. Permittee. Any individual, firm, trust, partnership, association or corporation to whom a permit is granted, including any person to whom a temporary permit is issued, such as that to maintain and operate a mobile home park under the provisions of this Ordinance.

238. Person. Any and all persons, including, but not limited to, any individual, partnership, association, society, joint stock company, firm, company, corporation, institution, trust, estate, other legal entity, business organization, any state or local governmental entity, and any successor of the foregoing.

239. Pervious Paving. Materials used for surfacing parking lots and driveways such as porous concrete or modular porous paver systems that are designed to allow infiltration of stormwater and are consistent with Construction Best Management Practices. Pervious paving areas are not considered as impervious surface areas for the purpose of calculating impervious surface coverage.

240. Planned Unit Development. A tract of land under single corporation, firm, partnership, or association ownership, planned and developed as an integral unit, in a single development operation or a defined programmed series of development operations in

accordance with an approved development plan.

241. Planning Commission. The City of Daphne Planning Commission as authorized by state statute to be responsible for reviewing and approving site plan and subdivision applications and for making recommendations to the City Council regarding annexations, zoning, vacation of easement and/or right-of-way, street acceptances and other duties as specifically provided by the state enabling act.

242. Plat. A map, plan, or layout of a county, city, town, section, or subdivision indicating the location and boundaries of properties. There are three types of plats: preliminary, preliminary/final and final.

    a. Preliminary Plat. A tentative plan of the complete proposed subdivision submitted to the Planning Commission for its consideration and public hearing.

    b. Preliminary/Final Plat. A subdivision with frontage to an existing publicly maintained street or common ingress/egress easement, not involving any new street, drainage or other public improvements, only the division of land into two or more lots.

    c. Final Plat. A plat submitted to the Planning Commission for its consideration with construction as-built drawings of a completed subdivision prior to final recording in the Baldwin County Judge of Probate Office.

243. Porch. A roofed-over space attached to the outside of an exterior wall of a building, which has no enclosure other than the exterior walls of such building. Open mesh screening shall not be considered an enclosure.

244. Principal Use or Building. The principal purpose for which a lot, the principal building thereon, or establishment therein is designed, arranged or intended, and for which it is or may be used, occupied or maintained. The principal use of an establishment, building, or lot shall be determined, for retail and service uses, by the majority – more than fifty (50) percent – of the gross sales receipts during any ninety (90) day period. In other cases, the use with the greatest square footage shall be considered the principal use.

245. Private Road. A street or road which has not been accepted and granted legal status as a City right of way or street in accord with *Article 17, Procedures for Subdivision Review subsection 4(h).*

246. Public Hearing. A hearing before the Daphne City Council, Planning Commission, or Zoning Board of Adjustments held pursuant to Title 11, Chapter 52 of Code of Alabama, 1975, as amended.

247. Public Land Uses. Any land use operated by or through a unit or level of government, either through lease or ownership, such as municipal administration and operation, county buildings and activities, state highway offices and similar land uses; and federal

uses such as post offices, bureau of public roads, internal revenue offices, military installations, etc.

248. Public Nuisance. A class of common law offense in which the injury, loss or damage is suffered by the local community as a whole rather than by individual victims.

249. Public Utility. Any person, firm, corporation, municipal department or board, duly authorized by the Alabama Public Services Commission or other governing entity with such jurisdiction, to provide electricity, gas, steam, telephone, telegraph, transportation, water or sewer service to the general public.

250. Public Well / Well Field. The area described within the Well Head Protection Plan describing the potentiometric surface from which a well draws water for public usage and is owned and operated by a public or private community water utility.

251. Qualified Credentialed Professional (QCP). A certified and/or accredited individual who is employed to prepare and implement CBMP plans and to provide monitoring maintenance, continued inspection of construction sites and receiving waters, BMPs, remediation/cleanup and provide for reclamation or effective stormwater quality remediation that meet or exceed recognized technical standards and guidelines.

252. Recharge Area. The land area which contributes water to a well by infiltration of water into the subsurface and movement with groundwater to a well. The surface land or water area through which an aquifer is replenished.

253. Recreational Areas. Any area designed for active or passive leisure time activities, requiring equipment and taking place at prescribed sites. Passive activities involve relatively inactive or less energetic activities, such as walking, sitting, picnicking, board and table games.

254. Recreational Vehicle. A self-propelled vehicle used for temporary housing of individuals and families during travel. This category, in this Ordinance is assumed to include also campers, camping trailers, motor homes and smaller mobile homes (up to a length of twenty-eight (28) feet exclusive of hitch) capable of being towed by a passenger motor car.

255. Regulatory Flood. The flood which is representative of large floods known to have occurred generally in the area and reasonably characteristic of what can be expected to occur. The regulatory flood generally has a flood frequency of approximately one hundred (100) years as determined from an analysis of floods at a particular site and other sites in the same general region.

256. Regulatory Flood Protection Elevation. The elevation of the regulatory flood plus one (1) foot of freeboard to provide a safety factor. See also Floodway, Regulatory definition.

257. Regulatory Floodway (See Floodway, Regulatory).

258. Residential Dock or Pier. A dock or pier constructed adjacent to a residential lot for gratis (without charge or fee) recreational purposes and/or mooring of private boats.

259. Residential Identification Sign. A sign that identifies the name of a residential subdivision, condominium development, townhouse or apartment complex.

260. Responsible Party. Any person, firm, corporation, utility, entity or agent thereof that engages in any site preparation and/or construction activities liable for construction activity and resultant damages caused. This term shall not be construed to include the City of Daphne.

261. Restrictive Covenants. Private regulations recorded with the Final Plat, which limit or otherwise govern the use, intensity and development patterns of the land within a subdivision or parcel of land for a specified time.

262. Retention Basin. Also known as a stormwater pond. An area used to contain stormwater and runoff from the drainage area.

263. Retaining Wall. A wall of wood, brick, concrete or other suitable material designed to prevent erosion of soil from sharply sloping land or from around pools, decks, foundations and other similar structures.

264. Revetment. A facing of stone, concrete, etc., built to protect a scarp, embankment, or shore structure against erosion by wave action or current.

265. Right-of-Way (ROW). A strip of land taken or dedicated for use as a public way. In addition to the roadway, it normally incorporates the curbs, lawn strips, sidewalks, lighting, and drainage facilities, and may include special features (required by the topography or treatment) such as grade separation, landscaped areas, viaducts, and bridges.

266. Roadside Stand. A temporary structure designed or used for the display or sale of agricultural and related products.

267. Roadway. That portion of a street between the regularly established curb lines or that part of a street devoted to vehicular traffic.

268. Rooming/Boarding House. Any building or portion thereof, other than a hotel or motel, which contains not less than three (3) or more than nine (9) guest rooms which are designed or intended to be used, let, or hired out for occupancy, more or less transiently, by individuals for compensation whether paid directly or indirectly, and without provisions for cooking by guests or meals for guests.

269. Satellite Receiving Dishes. A dish-shaped antenna designed to receive television broadcasts relayed by microwave signals from earth-orbiting communications satellites.

This definition also includes satellite earth stations, or television dish antennas.

270. Satisfactory Stand of Vegetation. Temporary or permanent vegetation sufficient to cover eighty percent (80 %) or more of the total disturbed soil surface with no more than 1 square foot of area void of vegetation.

271. Screening. A method of shielding, obscuring or buffering one use or building from another use or building by fencing, walls, densely planted vegetation, natural vegetation, including a transitional buffer or other means; a visual and acoustical barrier which is of such nature and density that provides year-round maximum capacity from the ground to a height as required by *Article 19, Landscape Standards and Tree Protection.*

272. Self-storage Facility, Limited-access. A self-storage facility with limited access points from the exterior of the building to interior halls that provide the only access to individual storage units.

273. Self-storage Facility, Multi-access. A self-storage facility with access points from the exterior of the building(s) to individual storage units.

274. Seat. For purposes of determining the number of off-street parking spaces for certain uses, the number of seats is the number of seating units installed or indicated, or each twenty-four (24) linear inches of benches, pews, or space for loose chairs.

275. Sediment Control. Measures that prevent and/or minimize eroded sediments from leaving the site.

276. Semi-Public Land Uses. Philanthropic and charitable land uses including: YMCA's, YWCA's, Salvation Army, churches and church institutions, orphanages, humane societies, private welfare organizations, nonprofit lodges and fraternal orders, hospitals, Red Cross, and other general charitable institutions.

277. Service Station, Automobile. Any building or land used for retail sale and dispensing of automobile fuels or oils; may furnish supplies, equipment and minor services to private passenger vehicles incidental to sale and dispensing of automobile fuels and oils.

278. Setback Line. A line established by the subdivision regulations and/or zoning ordinance, generally parallel with and measured from the lot line, defining the limits of a yard in which no building, other than accessory building, or structure, may be located above ground, except as may be provided in said Ordinance.

279. Sewers, Public or Community. An approved sewage disposal system which provides a collection network and disposal system and central sewage and treatment facility for a single community, development, or region.

280. Sewers, On-Site. A septic tank or similar installation on an individual lot which utilizes an aerobic bacteriological process or equally satisfactory process for the elimination of

sewage and provides for the proper and safe disposal of the effluent, subject to the approval of health and sanitation officials having jurisdiction.

281. Schedule of Fees. The schedule of fees assessed by the City of Daphne Planning Department with regard to the administration of the Land Use and Development Ordinance as specifically enumerated in *Article 34, Schedule of Fees*.

282. Shelter, Fall-Out. A structure or portion of a structure intended to provide protection of human life during periods of danger from nuclear fall-out, air raids, storms, or other emergencies.

283. Shopping Center. Two or more retail stores, commercial establishments, service establishments, and/or a combination of the above. Sharing: customer parking, common walls, and/or common walkways.

284. Shrub. A woody plant, generally multi-stemmed, smaller than a tree; consisting of several small stems or small branches near the ground; and either deciduous or evergreen.

285. Sidewalk Area. That portion of a street not included in the roadway, and devoted in whole or in part to pedestrian traffic.

286. Sign. Any words, lettering, parts of letters, figures, numerals, phrases, sentences, emblems, devices, designs, trade names or marks or combinations thereof, by which anything is made known, such as the designation of an individual, a firm, an association, a profession, a business, a commodity, or product which are visible from any public way and used as an outdoor display.

(a) Banner. Any sign of lightweight fabric or similar material that is mounted to a pole or a building at one or more edges.

(b) Billboard. A sign that directs attention to a business, commodity, service, or entertainment conducted, sold, or offered at a location other than the premises on which the sign is located.

(c) Changeable Copy Sign/Reader Board. A sign or portion thereof with characters, letters or illustrations that can be changed or rearranged without altering the face of the surface of the sign. A sign on which the message changes more than eight (8) times per day shall be considered an animated sign and not a changeable copy sign for purposes of this Ordinance.

A sign on which the only copy that changes is an electronic or mechanical indication of time or temperature shall be considered a "time and temperature" portion of a sign and not a changeable copy sign for purposes of this Ordinance.

(d) Construction Sign. Any sign giving the name or names of principal contractors, architects, and lending institutions responsible for construction on the premises

during the time actual construction work is in progress.

(e) Flashing, Electronic and/or Intermittent Illuminating Signs. Signs which contain intermittent illumination and the changes occur more than twelve (12) times per hour.

(f) Legal Nonconforming Sign. (*See Article 33, Sign Provisions,* for Definition).

(g) Marquee Sign. Any sign mounted to extend vertically below a marquee or canopy.

(h) Nonconforming Sign. (*See Article 33, Sign Provisions*, for Definition).

(i) Off-Premise Sign. A billboard or other sign relating its subject matter or any portion thereof to premises other than the premises on which said sign is located.

(j) On-Premise Sign. A sign relating its subject matter to the premises on which said sign is located.

(k) Permanent Sign. A sign permanently affixed to a building or the ground.

(l) Political Sign. A sign identifying and urging voter support for or in opposition to a particular issue, political party, or candidate for public office.

(m) Portable Sign. Any sign whether on its own trailer, wheels, or otherwise, which is designed to be transported from one place to another.

(n) Premises. An area of land with its appurtenances and buildings which, because of its unity of use, may be regarded as the smallest conveyable unit of real estate.

(o) Real Estate Sign. A sign which advertises the sale, rental or development of the premises upon which it is located.

(p) Sandwich Sign. Any sign, double or single faced, which is portable and may readily be moved from place to place.

(q) Temporary Sign. A sign or advertising display intended to be displayed for a short period of time, not to exceed thirty (30) calendar days (See temporary use).

(r) Wall Sign. A sign attached to or erected against the wall of a building with the face parallel to the plane of the building wall.

(s) Window Sign. Any sign placed inside or upon a window facing the outside and which is intended to be seen from the exterior.

287. Sign Height. The vertical distance from the finished grade at the base of the supporting structure to the top of the sign, its frame, or supporting structure, whichever is higher.

Such grade shall not be altered from the natural ground elevation.

288. Sign Surface Area. The surface area of a sign shall be computed for the area within the periphery of regular geometric forms, comprising all of the display area of the sign and including all the elements of the matter displayed, but not including structural elements of the sign bearing no advertising matter or other supporting structure. The surface area of a sign shall also be referred to as the "sign face."

289. Significant Increase in Trip Generation. A change in the use of a property, including land, structures, or facilities, or an expansion of the size of structures or facilities, causing an increase in the trip generation of the property exceeding ten (10) percent (either peak or daily) and one hundred (100) vehicles per day more than the existing use for adjacent thoroughfares under local jurisdiction; or exceeding twenty-five (25) percent (either peak or daily) and one hundred (100) vehicles per day more than the existing use for all thoroughfares under state jurisdiction.

290. Single-Use Building or Tenant. Property which is occupied by one tenant for the purpose of conducting business.

291. Site Disturbance Permit. Authorization from the Director of Community Development or designee thereof for an individual, firm, trust, partnership, association or corporation to undertake activities related to subdivisions, zoning, PUD's, land use, building or other actions permitted in this Ordinance or by other City of Daphne authorization.

292. Site Plan. A plan, as required by *Article15, Procedures for Site Plan Review*, that provides detailed information about the layout of private land development and required public improvements prior to preparation of construction drawings for a land development that does not include subdivision of property that would otherwise be subject to a preliminary plat.

293. Sod. Various types of grasses planted and maintained in a lawn condition.

294. Special Exception. A land use which may be permitted that is not similar in nature to the uses permitted in a district, but that is desired in the community and for which a suitable district is not available. Such use may be permitted in the most nearly appropriate district where a location is available, upon appeal to and approval by the Board of Zoning Adjustment, which may set forth special conditions under which the use may be allowed.

295. Spot Zoning. The rezoning of a lot, lots, or parcel of land, located within the limits of an existing zoning district, to benefit an owner for a use incompatible with surrounding land uses and that does not further the comprehensive zoning plan.

296. Stabilization. Practices implemented to prevent the erosion of exposed soils.

297. Staining Materials. All soils and fill materials that have more than ten percent (10%) by weight passing through a two hundred (200) mesh sieve.

298. Start of Construction. The initiation of land disturbance as permitted by a site disturbance permit. Such disturbance includes land preparation, clearing, excavation, grading and/or filling.

299. State Owned Submerged Lands. Those lands including but not limited to, tidal lands, sand bars, shallow banks, and lands water ward of the mean low water line beneath navigable fresh water or the mean high tide line beneath tidally-influences waters, to which the State of Alabama has acquired.

300. Stormwater Management Facility. Any combination of landscape and structural features that retain, detain or convey stormwater runoff from a specific drainage area.

301. Story. That portion of a building included between the surface of any floor and the surface of the next floor above it, or if there is no floor above it, then the space between such floor and the ceiling next above it.

302. Story, Habitable. A story having its floor elevated at or above base flood elevation, as established by the City of Daphne, regardless of the intended use of the story or its floor area and complying with applicable building codes.

303. Stream, 303(d) Listed. Alabama Department of Environmental Managements priority ranking (as amended) of stream sections that do not meet applicable State water quality standards, established pursuant to Section 303(d) of the Clean Water Act on 1972. 303(d) Listed Streams within the Daphne jurisdiction include D' Olive Creek, Joe's Branch, the Upper Tributary to D' Olive Creek, the Upper Tributary to Tiawasee Creek, and Tiawasee Creek.

304. Stream Bank. The terrain alongside the bed of a river, creek, or stream.

305. Stream, Impaired. Any stream or segment thereof listed by the Alabama Department of Environmental Management "as 303(d)".

306. Street. Any public or private way set aside for common travel more than thirty (30) feet in width if such existed at the time of enactment of this Ordinance, or such right-of-way fifty (50) feet or more in width if established thereafter.

    (a) Collector Street. A street used to carry traffic from minor streets to the system of major streets.

    (b) Cul-de-sac or Dead End Street. A street having one end open to traffic and one terminating in a vehicular turnaround.

    (c) Major Street, Arterial Street or Highway. A street or highway or exceptional continuity designed to carry high volume traffic considerable distances.

    (d) Minor Street or Local Street. A street used primarily for access to abutting properties.

307. Structural Alteration. Any change, except for repair or replacement, in supporting members of a building or structure, such as bearing walls, columns, beams or girders, and which complies with applicable building codes.

308. Structure. Anything constructed or erected, the use of which requires a location on the ground, or attached to something having a location on the ground.

309. Structure, Existing. Any structure the construction of which was initiated and all required state, local and federal authorizations were obtained prior to the effective date of this Ordinance.

310. Structure, New. Any structure which is not an existing structure.

311. Subdivider. Any individual, firm, association, syndicate co-partnership, corporation, trust, or any other legal entity commencing proceedings to effect a subdivision of land hereunder.

312. Subdivision. The division of a lot, tract, or parcel of land into two (2) or more lots, plats, sites, or other division of land for the purpose, whether immediate or future, of sales or of building development. It includes re-subdivision and, when appropriate to the context, relates to the process of subdividing or to the land or territory being subdivided. It shall include all divisions of land involving the dedication of a new street or a change in existing streets. However, the following shall not be included within this definition or be subject to the requirements thereof:

    (a) Property that is divided by probated family estates;

    (b) The public acquisition by gift or purchase of strips or parcels of land for the widening or opening of streets or for other public uses.

313. Subdivision - Extraterritorial Planning Jurisdiction. The division of a lot, tract, or parcel of land into two (2) or more lots, plats, sites, or other division of land for the purpose, whether immediate or future, that is divided by an individual and given and/or sold to parents, spouses, sisters, brothers, children, or grandchildren, either adopted or natural, where no streets or roadway access to the lots is involved and where lots are less than the minimum lot size as herein required.

314. Submerged Lands. Those lands situated below the mean low waterline or all of the lands covered by the mean high waterline.

315. Substantial Improvement. Any addition, extension, enlargement, or expansion, repair, reconstruction, or improvement of any permanent structure, the cost of which equals or exceeds fifty percent (50%) of the fair market value of the structure either before the repair, reconstruction, or improvement is started or if the structure has been damaged and is being restored before the damage occurred. For the purpose of this Ordinance,

substantial improvement is considered to occur when the alterations of any wall, ceiling, floor or other structural part of the building commences, whether or not that alteration affects the external dimensions of the structure.

The term does not, however, include either (1) any project for improvement of a structure to comply with existing state or local health, sanitary, or safety code specifications which are solely necessary to ensure safe living conditions, or (2) any alterations or restoration of a structure listed on the National Register of Historic Places or a State Inventory of Historic Places.

316. Surveyor or Applicant's surveyor. A professional surveyor licensed in the State of Alabama.

317. Swale. A depression in the ground which channels stormwater runoff, where the side slopes are no steeper than four (4) to one (1) run to rise.

318. Temporary BMPs. Temporary best management practices are designed to remain effective for a relatively short duration of time, usually until the construction site is complete and permanent BMPs have been established. Temporary BMPs are only effective if they are installed correctly and maintained. These include but are not limited to silt fences, hay bales and mulch.

319. Temporary Use. A short period of time; not to exceed thirty (30) calendar days.

320. Telecommunications Facility. A facility owned or operated by a public utility or a business, that transmits and/or receives electromagnetic waves, including antennas, microwave dishes, horns, and other types of equipment for the transmission or receipt of such signals, telecommunications towers, or alternative supporting structures and uses.

321. Telecommunications Tower. Any structure that is designed and constructed primarily for the purpose of supporting one or more antenna, including self-supporting lattice towers, guyed towers, or monopole towers. The term includes radio and television transmission towers, microwave towers, common carrier towers, cellular telephone towers, and the like (See Also Antenna Support Structure).

322. Tourist Home. A building, or part thereof, other than a motel or hotel, where sleeping accommodations are provided for transient guests, with or without meals, and which also serves as the residence of the operator.

323. Townhouse. An individually-owned, single family attached dwelling unit having a separate ground floor entrance and separate private yard space, with common side walls on one or both sides of the dwelling unit, and not exceeding two and one-half (2-1/2) stories or thirty-five (35) feet in height.

324. Travel Trailer Park. A development for the accommodation of tourists or vacationers on a short-term basis, providing rental spaces for each individual trailer, camper, motor home,

and recreation and service facilities for the use of the tenants, whether publicly or privately owned and whether operated for or without compensation.

325. Tree. A self-supporting woody plant, usually having a single woody trunk and a potential DBH of two inches or more, and normally attaining a mature height of twenty-five (25) feet or more. For the purposes of this Ordinance, trees may be categorized as follows:

    (a) Overstory Tree. Trees which, at maturity, comprise the canopy of a natural forest. Generally greater than fifty (50) feet at mature height.

    (b) Public/City Tree. Any tree located on City or public property including City right-of-way.

    (c) Significant Tree. Any tree that has aged and grown to an impressive stature, for its species, to be considered an integral part of the City's natural heritage.

    (d) Understory Tree. Trees which, at maturity, comprise the sub-canopy of a natural forest. These are generally under fifty (50) feet at a mature height. Suggested list of understory trees include: Japanese Maple, Redbud, Fringe Tree, Crape Myrtle, Oriental Magnolia, Vitex, Sweet Bay Magnolia, American Holly, Loquat, Cherry Laurel, Japanese Evergreen Oak, East Palatka Holly, or Savannah Holly.

325. Tree Credits. An incentive to preserve existing trees whereby on-site trees may be counted toward the landscape requirements of this ordinance. Such credits may be used to offset the number of new required trees that would otherwise have to be planted.

326. Trust Indentures. A bond indenture that includes provisions for the appointment of trustees who may act on behalf of the bondholders.

327. Use. The specific purpose for which land or a building is designated, arranged, intended, or for which it is or may be occupied or maintained.

328. Utility, Water. Any public community water supplier serving customers and owning and operating public water wells within the City limits and its planning jurisdiction.

329. Variance. A modification of the strict terms of the relevant regulations in a district with regard to placement of structures, developmental criteria or provision of facilities.

    Examples would be:

    (a) Allowing smaller yard dimensions because an existing lot of record is of substandard size.

    (b) Waiving a portion of required parking and/or loading space due to some unusual circumstances.

(c) Allowing fencing and/or plant material buffering different from that required, due to some unusual circumstances. This is available only on appeal to the Board of Zoning Adjustment.

330. Waiver. Permission to depart from the requirements of an ordinance with respect to the submission of required documents based upon findings and conclusions of the Planning Commission.

331. Watercourse. Any body of water, including but not limited to creeks, rivers, streams, and bays.

332. Waterway. A dry or wet channel that directs surface runoff to a watercourse or to the public storm drain.

333. Well. A hole or shaft sunk into the earth to tap an underground supply of water.

334. Well Field. See Public Well.

335. Well Head Protection Area (WHPA). The surface and subsurface area surrounding a water well or well field, supplying a public water system, through which contaminants are likely to move toward and reach such water well or well field.

336. Wetlands. An area or areas that are inundated or saturated by surface or ground water at a frequency and duration sufficient to support, and that under normal circumstances do support a prevalence of vegetation typically adapted for life in saturated soil conditions and generally include swamps, marshes, bogs and similar areas.

337. Wetlands, Jurisdictional. A wetland area that meets the definitional requirements for wetlands to include the hydrology, hydric soil types and wetland vegetation as determined by the U. S. Army Corps of Engineers, 1987 Federal Wetland Delineation Manual.

338. Wholesale Establishment. Business establishments that generally sell commodities in large quantities or by the place to retailers, jobbers, other wholesale establishments, or manufacturing establishments. These commodities are basically for further resale, for use in the fabrication of a product, or for use by a business service.

339. Yard. A space on the same lot with a main building, such space being open, unoccupied and unobstructed by buildings or structures from ground to sky, except where encroachments and accessory buildings are expressly permitted.

(a) Yard, Front. An open, unoccupied space on the same lot with the main building, extending the full width of the lot and situated between the right-of-way line and the front line of the building projected to the side lines of the lot. The depth of the front yard shall be measured between the front lines of the building and the right-of-way line.

Covered porches, whether enclosed or unenclosed, shall be considered as a part of the main building and shall not project into a required front yard.

(b) Yard, Rear. An open space on the same lot with the main building, such space being unoccupied except possibly by an accessory building and extending the full width of the lot and the rear line of the main building projected to the side lines of the lot.

(c) Yard, Side. An open, unoccupied space on the same lot with a main building, situated between the side line of the building and the adjacent side line of the lot extending from the rear line of the front yard to the front line of the rear yard. If no front yard is required, the rear boundary of the side yard shall be the rear line of the lot.

(d) Yard, Minimum. That yard space remaining if the property is developed to the fullest extent allowable under applicable ordinances.

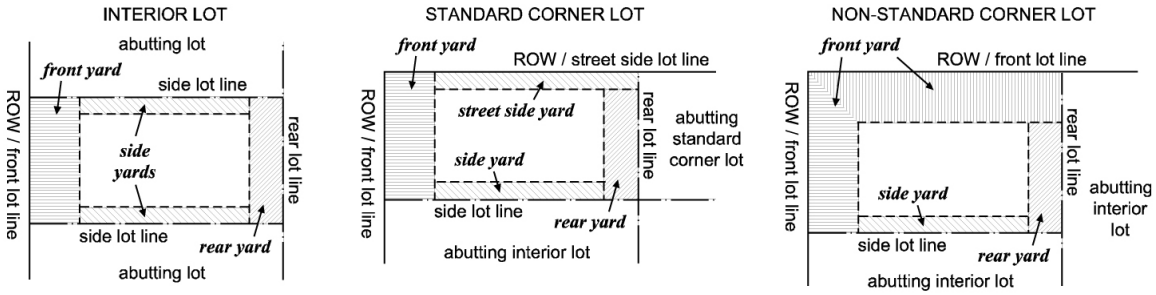

340. Zero Lot Line. A developmental approach in which a dwelling unit is cited along one or more lot lines.

341. Zoning Administrator. The administrative officer designated to administer the zoning ordinance and issue land use certificates.

342. Zoning District. A section of the City of Daphne designated in this Ordinance text and delineated on the zoning map wherein all requirements for use of land and building and development standards must be uniform.

343. Zoning District Map. The map or maps, which are a part of this Zoning Ordinance, and which delineate the boundaries of zoning districts.

8-3 ACRONYMS/ABBREVIATIONS

ac – acre(s)
ACAMP - Alabama Coastal Area Management Plan
ADCNR - Alabama Department of Conservation and Natural Resources
ADEM – Alabama Department of Environmental Management
AHC - Alabama Historical Commission
ALDOT – Alabama Department of Transportation
ANSI – American National Standards Institute
ATM – automated teller machine
BFE – base flood elevation
bldg – building
BMP – best management practices
BR – bedroom
CBMPP-construction best management practices plan
DBH – diameter at breast height
EQ – equal
FAA - Federal Aviation Administration.
FCC - Federal Communications Commission
fc – foot candle
ft – foot or feet
GFA – gross floor area
HOA - Home Owners Association
Hwy – highway
ITE – Institute of Transportation Engineers
lf – linear feet
LEED - Leadership in Energy and Environmental Design
LID-Low Impact Development
MS4 – city's municipal separate storm sewer system
max – maximum
min – minimum
mph – miles per hour
na – not applicable
NAVD 88 - North American Vertical Datum of 1988
NFA – net floor area
NPDES -National Pollutant Discharge Elimination System
NRCS – National Resources Conservation Service
POA - Property Owners Association
PUD – Planned Unit Development
ROW – right-of-way
sf – square feet
St – street
USACE United States Army Corps of Engineers.
USDA – United States Department of Agriculture
USFWS—United States Fish and Wildlife Services
% – percent
§-section, subsection, paragraph or item within this Ordinance or other regulations, as specified

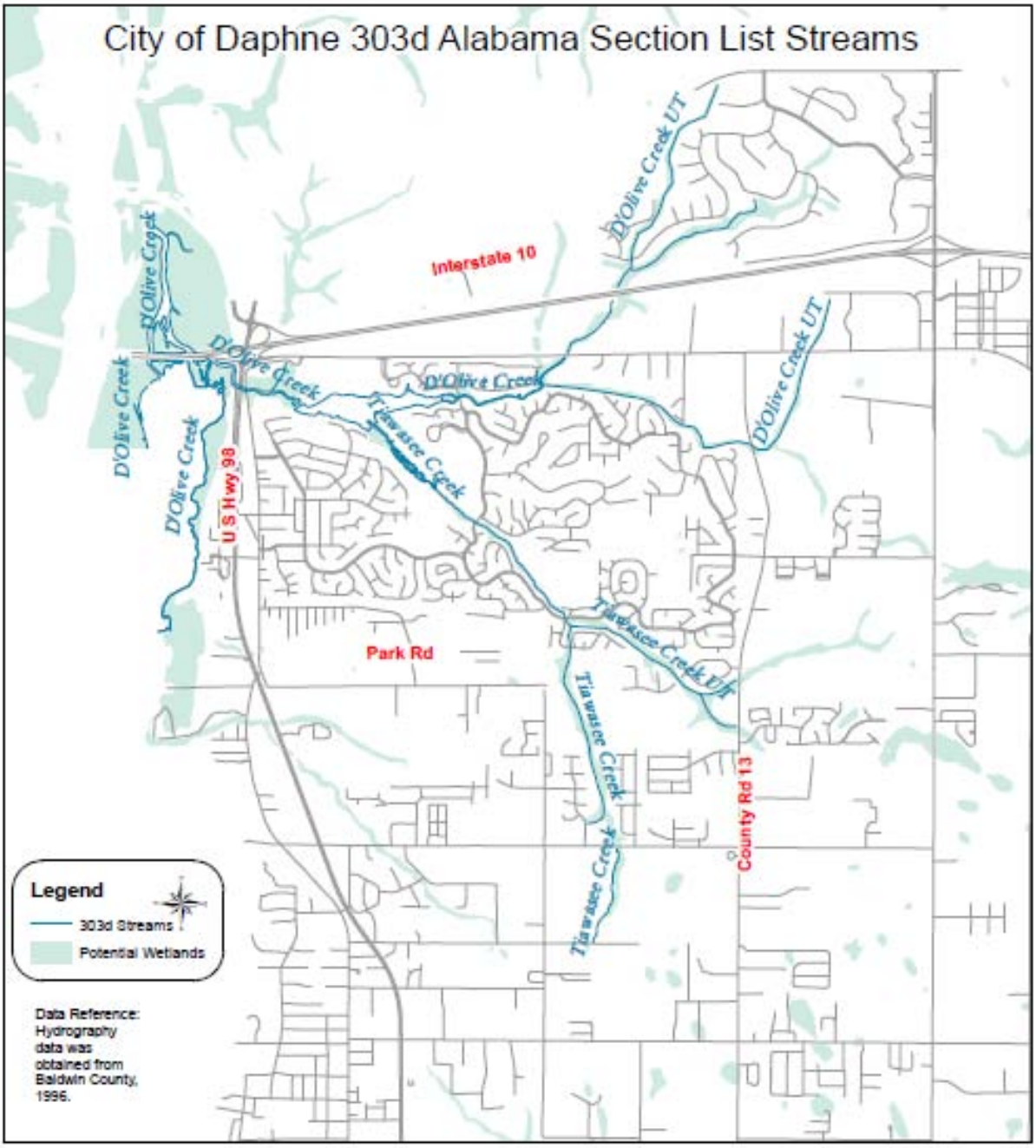
City of Daphne 303d Alabama Section List Streams
Interstate 10
D'Olive Creek UT
D'Olive Creek
D'Olive Creek
D'Olive Creek
D'Olive Creek
D'Olive Creek
D'Olive Creek UT
Tiawasee Creek
Tiawasee Creek
Tiawasee Creek Ult
Tiawasee Creek
Tiawasee Creek
U S Hwy 98
Park Rd
County Rd 13
Legend
303d Streams
Potential Wetlands
Data Reference:
Hydrography
data was
obtained from
Baldwin County,
1996.

WELL HEAD PROTECTION AREAS

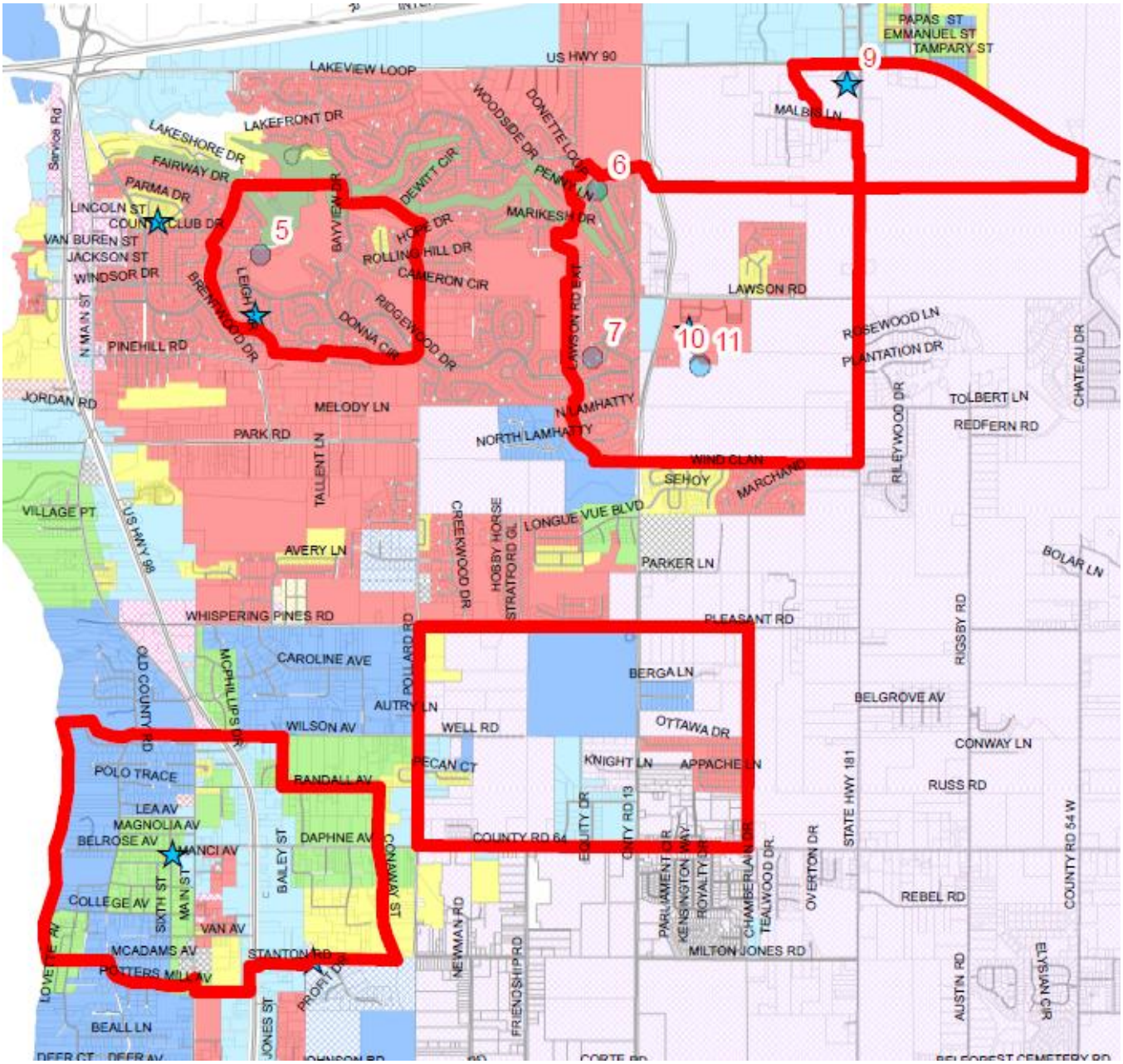

ARTICLE IX

DISTRICT PROVISIONS

Except as hereinafter provided, the following shall generally apply:

9-1 RULES FOR DETERMINING BOUNDARIES

Where uncertainty exists with respect to the boundaries of any of the districts as shown on the official Zoning District Map, the following rules shall apply:

(a) Unless otherwise indicated, the zoning district boundary lines shall be construed to follow property lines, land lot lines, center lines of streets, highways, alleys, shorelines of streams, reservoirs, other bodies of water, or civil boundaries.

(b) Where zoning district boundaries are approximately parallel to the center lines of streets, highways, railroads, streams, reservoirs, bodies of water, or lines extended such zoning district boundaries shall be construed as being parallel thereto and at such distance therefrom as indicated on the official Zoning District Map. If no distance is given, such dimensions shall be determined by the use of the scale shown on the official Zoning District Map.

(c) Where zoning district boundary lines appear on the official Zoning District Map and it divides a lot which is in single ownership at the time of this enactment of this Ordinance, the use classification of the larger(est) portion may be extended to the remainder by the Planning Commission without recourse to amendment procedure.

(d) Where a public road, right-of-way, street, or alley is officially vacated or abandoned, the regulations applicable to the property to which it is reverted shall apply to such vacated or abandoned public road, right-of-way, street, or alley.

(e) In case the exact location of a zoning district boundary line cannot be determined by the foregoing methods, the Board of Zoning Adjustment shall upon application determine the location of the line.

9-2 NONCONFORMANCE

It is the intent of this section to recognize the elimination of existing buildings and structures or uses that are not in conformance with the provisions of this Ordinance in as much as it is a subject of health, safety, and general welfare and for the prevention of the establishment of new uses which would violate said provisions. It is also the intent of this Ordinance to administer the elimination of

nonconforming uses, buildings, and structures so as to avoid any unreasonable invasion of established private property rights.

Any structure or use of land existing at the time of the enactment of this Ordinance and amendments thereto and not in conformance with its use regulations and provisions may be continued subject to the following provisions:

(a) Unsafe Structures:

Any structure or portion thereof declared unsafe by any authority may be restored to a safe condition provided the restoration is in compliance with requirements of this section.

(b) Alterations:

Any change in a nonconforming building site or yard area is subject to the following:

(1) No nonconforming building can be structurally altered, except for repairs or the installation of plumbing fixtures required by law; the changing or interior partitions; interior remodeling, cannot be substantially added to moved or extended in anyway unless the addition meets the provisions of this Ordinance.

(2) Should a nonconforming building be moved, all nonconforming yard areas shall be eliminated.

(3) A nonconforming use of land shall be restricted to the lot occupied by such use as of the effective date of this Ordinance. A nonconforming use of a building or buildings shall not be extended to include either additional buildings or land subsequent to the enactment of this Ordinance.

(4) A nonconforming building, structure, or improvement which is hereafter damaged or destroyed to an extent exceeding fifty percent (50%) of the reasonable estimated replacement cost of the structure, building or improvement may not be reconstructed or restored to the same nonconforming use, except upon the approval of the Board of Zoning Adjustment. Such damaged or destroyed structures that are no longer in use shall be removed and the site cleared at the owner's expense.

(c) Change in Use:

A nonconforming use which is changed to a conforming use shall not be permitted to revert to the original or a less restrictive use.

(d) Discontinuance:

A nonconforming use which became such upon the adoption of this Ordinance and which has been discontinued for a continuous period of one (1) year shall not be reestablished and any future use shall be in conformity with the provisions of this Ordinance.

(e) Adjacent Land:

The presence of a nonconforming use in a zoning district shall not be legal grounds for the granting of variances for other surrounding properties by the Board of Zoning Adjustment.

9-3 BLOCKS

Blocks shall be arranged to assure maximum use of the topographic features of the land and shall not be less than four hundred (400) feet nor more than twelve hundred (1200) feet in length, except as the Planning Commission considers necessary to secure efficient use of land or desired features of a street pattern. In blocks more than eight hundred (800) feet in length, the Planning Commission may require one or more public crosswalks of not less than ten (10) feet in width to extend entirely across the block at locations deemed necessary.

Blocks shall be wide enough to allow two tiers of lots of minimum depth, except where fronting on major streets, limited access highways, railroads, or where prevented by topographical conditions or size of the property, in which case the Planning Commission will approve a single tier of lots of minimum depth.

9-4 LOTS

The size, shape, and orientation of lots shall be such as the Planning Commission deems appropriate for the type of development, use contemplated, and shall be properly related to the topography of the land and character of the surrounding development. Insofar as practical, side lot lines shall be at a right angle to straight street lines or radial to curved street lines.

Residential lots served by central water and sewerage systems shall not be less than fifty (50) feet wide at the building setback line nor less than five thousand (5,000) square feet in area, provided they comply with the requirements of the zoning district in which the development is to occur.

Residential lots with central water supply, but not served by a central sewerage system shall not be less than ninety (90) feet wide at the building setback line nor less than fifteen thousand (15,000) square feet in area; provided, however, greater area may be required by the Planning Commission if it is indicated by data from percolation tests or determined by the Baldwin County Health Department.

Residential lots served by an individual source of water supply and an individual sewage disposal system shall be not less than one hundred (100) feet wide at the building setback line nor less than twenty thousand (20,000) square feet in area as required by the Baldwin County Health Department after investigation of soil conditions, proposed sewerage system, and depth of ground water.

9-5 FLAG LOTS

A flag lot is a lot with two distinct parts: 1. the flag, which is the only building site; and is located behind another lot; and 2. the staff, which connects the flag to the street; provides the only street frontage for the lot; and at any point is less than the minimum lot width for the zone.

These regulations allow for the creation of flag lots in limited circumstances. The limitations are intended to minimize the negative impacts of flag lots and additional driveways on an area while allowing land to be divided when other options are not achievable.

A residential subdivision shall not consist of more than two (2) flag lots and shall comply with the following criteria:

(a) Shall have access to a public street or right-of-way by means of an ingress/egress easement thirty (30) feet in width. The staff must be part of the flag lot, connect to a street and be under the same ownership as the flag portion of the lot. Access easements to allow for use of the staff by another lot may be required. The “staff” shall be an all weather driving surface with adequate drainage and properly maintained. “All weather surface” means asphalt, concrete, gravel, or road base. Shared access for up to two lots may be allowed with a recorded easement for all property owners. The staff portion of the flag lot shall not be longer than two hundred fifty (250) feet. Any exemption to these provisions may be granted by the Planning Commission upon request.

(b) The minimum lot area shall be compatible with the minimum square footage as required by the zoning district in which the development is to occur. The staff shall not be a part of the required lot or parcel area and shall provide frontage on a public street or right-of-way.

(c) The setbacks shall be compatible with the minimum setback requirements of the zoning district in which the development is to occur.

(d) The front setback shall be measured from the projected lot line of the principle lot parallel to the thirty (30) foot ingress/egress easement.

(e) The rear and side setbacks shall be measured from the property line.

(f) Said subdivision shall include up to four lots. Any further subdivision of the property shall require the thirty (30) foot ingress/egress easements to become a dedicated right-of-way for the purpose of the developer, subdivider, or owner to construct a street in accordance with the specifications and requirements provided herein and to provide all minimum improvements for a subdivision.

(g) Any subdivision with more than four residential or commercial lots shall be subject to *Article 17, Subdivision Regulations.*

(h) The record plat of any flag lot subdivision shall show that the staff, i.e., access from the dedicated public street to the property, is a dedicated ingress/egress easement; is not a city street; and will not be maintained by City of Daphne.

9-6 LOTS OF RECORD

Where the owner of a lot of record or his successor to the title thereto does not own sufficient land to enable him to conform to the dimensional requirements of this Ordinance, the following exceptions may be allowed:

(a) Where a lot, tract, or parcel of land has an area or width which does not conform to the requirements of the district in which it is located, said lot may be used for a single family dwelling in any residential district, provided the lot to be used has a minimum area of four thousand (4,000) square feet and a minimum lot width at the building line of forty (40) feet and is connected to public sewer. In Commercial/Industrial Districts, uses compatible with the district may be allowed by the Planning Commission.

(b) When two or more adjoining lots with a continuous frontage are in a single ownership at the time of the application, and such lots have a frontage or lot area less than is required by the zoning district in which they are located, such lots shall be platted or reparcelled to create one or more lots which conform to the minimum frontage and area requirements of the zoning district.

No lot or parcel, even though it may consist of one or more adjacent lots of record, shall be reduced in size so the lot width, depth, front, side, rear yard, inner or outer courts, or lot area or other requirements of this Ordinance are not maintained. This section shall not apply when a portion of a lot is acquired for public use.

(c) Buildings or structures located on substandard lots of record may be improved only when the addition of adequate plumbing is required by the laws and ordinances of the City of Daphne.

9-7 SUBSTANDARD LOTS OF RECORD

Yard requirements shall be modified subject to the following conditions:

(a) On double frontage lots, the required front yard shall be provided on each public street or right-of-way.

(b) An unroofed porch shall not project into a required front yard for a distance exceeding five (5) feet.

(c) The side yard requirements for substandard lots of record may be reduced for each side yard at the rate of one (1) foot for each four (4) feet by which the lot width lacks fifty (50) feet, provided in no event shall such side yard be reduced to less than five (5) feet on each side.

(d) The setback requirements for side yards and/or front yards on corner lots or lots of record where setbacks have not been established shall not apply to any lot where the average setback on residentially developed lots located, wholly, or in part two hundred (200) feet on each side of the such lot and within the same block, zoning district, and fronting on the same streets if such lot is less than the minimum required setback. In such cases, the setback on such lot may be less than the required setback, but not less than the average of the setbacks of the existing developed lots.

9-8 FARM LAND

Other provisions of this Ordinance notwithstanding, any tracts of farm land under cultivation, pasture land, or timberland presently being used for such purposes, consisting of at five (5) acres or more in size, may continue to be used for such purposes regardless of the zoning district in which it lies.

9-9 YARDS

No part of a yard or other open space required for any building for the purpose of complying with the provisions of this Ordinance shall be included as part of a yard or open space similarly required for another building. Every part of a required yard or court shall be open from its lowest point to the sky unobstructed, except for the ordinary projection of sills, cornices, buttresses, ornamental features, chimneys, flues, and eaves, provided such projections shall not extend more than two (2) feet beyond the yard area requirements.

9-10 ONE PRINCIPAL BUILDING PER LOT

Every residential building, hotels, motels, condominiums, single family and multi-family dwellings, and duplexes hereafter erected or moved shall be located on a lot and in no case shall there be more than one (1) principal residential building on a lot except as follows:

(a) In any district where multi-family structures, motels, hotels, or two (2) or more residential structures may be permitted on a lot provided no building shall be located closer to another building on the same lot than a distance equal to half the sum of the heights of both buildings.

(b) In Flood Hazard areas identified on the National Flood Insurance Rate Maps, the height of a building shall be measured from the floor level of the first habitable story for purposes of this section. In addition, the front or rear of any building may be no closer to the front or rear of any other building than forty (40) feet. The side of any building shall be no closer to the side, front, or rear of any other building than thirty (30) feet.

9-11 ACCESSORY USES

(a) General:

Any use may be established as an accessory use to any permitted principal use in any district provided:

(1) Is customarily incidental to and is maintained and operated as a part of the principal use.

(2) Is not hazardous to and does not impair the use or enjoyment of nearby property in a greater degree than the principal use with which it is associated.

(3) Does not create levels of noise, odors, vibration and lighting, or degrees of traffic congestion, dust or pollutants, in a greater amount than customarily created by principal use.

(b) Satellite Receiving Dishes:

Satellite receiving dishes are permitted accessory uses in any district, provided they comply with the setback, height, and other standards provided herein. In any district, the dish shall be located to the rear of the front building line and must be set back ten (10) feet from any interior or rear lot line.

Special setbacks indicated herein apply on corner lots. The dish together with the principal and accessory building may not exceed the maximum lot coverage permitted in the district in which it is located. In residential districts where the antenna is detached from the main building, its maximum height may not exceed fifteen (15) feet. When roof mounted, it must conform to the zoning district's height requirements and its installation must be checked for safety by the Building Official. Installation and construction must also comply with the building code. No form of advertising or identification is allowed on the dish or framework other than manufacturers' small identification plates.

(c) Radio and TV Antennas**:**

Private radio and TV antennas for individual homes or for amateur uses are permitted as accessory structures in any district and may be placed on roofs or in rear or side yards so they do not occupy more than fifty percent (50%) of said yard, nor come closer than five (5) feet to any right-of-way or property line. Antennas in excess of the normal height limitations for the zoning district in which they are located are subject to approval and permitting by the Building Official.

Said permit shall include a clause which shall indemnify, hold harmless, and protect the City of Daphne against any and all liabilities which may result from the erection and use of such radio and TV antennas.

Antennas must be properly constructed in compliance with the requirements of the Federal Communications Commission (FCC), the American Radio Relay League, Inc. (ARRL), or equivalent standards and good engineering practices as determined by the Building Official.

(c) Fall-Out Shelters:

Fall-out shelters are permissible as principal or accessory structures in any zoning district, subject to the following conditions:

(1) If any portion of the structure extends above the ground, the portion above the ground must comply with the yard and lot coverage requirements of the zoning district in which it is located. The plot plan for such shelter shall be approved by the Building Official.

(2) If the structure is completely underground, it need not comply with yard requirements or percentage of lot coverage requirements.

(3) A fall-out shelter, underground or above ground, shall be confined to a side or rear yard and shall not be located in the front yard between the main building and the street on which it fronts.

(4) Fall-out shelters may contain or be contained in other structures or may be constructed separately.

9-12 ACCESSORY STRUCTURE

Where an accessory structure is attached to the main building, a substantial part of one wall of the accessory structure shall be an integral part of the main building or such accessory structure shall be attached to the main building in a substantial manner by a roof, and therefore, such requirements applicable to the main building shall apply. The lot shall be large enough to accommodate the principal building and the accessory building or building(s) and meet the yard and other district requirements as otherwise provided herein. The principal building and accessory structure must comply with the requirements applicable to the maximum building coverage specified in this Ordinance.

In residential districts, a detached accessory structure shall conform to the following requirements:

(a) Shall not be located on a lot by itself, nor be located or extend into the front yard.

(b) Shall not be constructed to exceed more than one (1) story or fifteen (15) feet mean roof height unless such building sits within the primary residence building setback lines, and shall not exceed more than thirty (30%) percent of the rear yard.

(c) Shall not be closer than five (5) feet to the main building.

(d) Shall maintain a side yard setback of not less than five (5) feet.

(e) Shall maintain a rear yard setback of not less than five (5) feet.

(f) There shall be one (1) power meter to service both the primary residence

and the accessory structure. A second power meter may be allowed with the approval of the Building Official in conditions of extreme hardship due to distance or access. The decision of the Building Official may be appealed to the Board of Zoning Adjustment in accordance with provisions established herein.

9-13 ACCESS TO PUBLIC STREETS

Access to public streets shall be maintained in accordance with the following requirements:

(a) Each principal use shall be placed on a lot or parcel which provides frontage on a public street having a right-of-way of not less than fifty (50) feet, except where existing public right-of-way is less than fifty (50) feet.

9-14 SINGLE FAMILY DWELLING

Single Family - a detached building designed for and occupied by one family as a home, with cooking and housekeeping facilities which meets or exceeds the following standards:

(a) The home has a length not to exceed four (4) times its width, with the length measured along the longest axis and the width measured at the narrowest part of the other axis with the minimum width of not less than twenty (20) feet.

(b) The roof shall have a minimum 3:12 (three to twelve) roof pitch and shall have a surface of wood shakes, asphalt composition, wood shingles, concrete, fiberglass or metal tiles, slate, or built up gravel materials. All roof structures shall provide an eave projection of not less than six (6) inches.

(c) The exterior siding materials shall consist of wood, masonry, concrete, stucco, masonite, metal, brick, or vinyl lap or other materials of like appearance.

(d) The electric meter must be attached to the structure.

(e) Taxed as real property.

ARTICLE X
GENERAL PROVISIONS

Except as hereinafter provided the following shall generally apply:

10-1 SCREENING, LIGHTING, AND SPACE

(a) Protection Buffer:

In any business or commercial/industrial district, an operation not conducted within a building such as drive-in business, outdoor recreation, outdoor storage of materials, and outdoor servicing activities occurs shall be enclosed by a wall or fence as a protection buffer or adequate screening. In any district where reference is made requiring a protection buffer for a specified operation, said screening shall be a wall or fence of a solid appearance, shall be at least six (6) feet in height, and of a construction and design approved by the Planning Commission and/or a staggered double row of Evergreen plantings at least ten (10) feet in width which shall grow to at least ten (10) feet in height and spaced in a manner which after three (3) years will provide an impervious visual barrier. Said protection buffer shall be maintained by the owner of the property in order to conceal such areas or facilities from a residential district adjoining, facing, across a street, in the rear, or on the side of the principal building or use. *See also "Dumpsters, Trash Refuse and Recycling Containers,"* herein.

Every use in any district shall be conducted entirely within a completely enclosed structure, unless expressly exempted from the enclosure requirements of this Ordinance.

(b) Lighting:

Outdoor lighting, of all types, shall be directed as to reflect away from all residential dwellings and public rights-of-way.

(c) Administration and Enforcement:

The Code Enforcement Officer may cause the removal, replacement, repair, and/or correction at the owner's expense, any screening, lighting, and space improperly maintained.

10-2 USE

No building or land shall hereafter be used or occupied, no building or a part thereof be erected, constructed, moved, or altered, except in conformity with the regulations for the zoning district in which the development is to occur, except as otherwise provided herein.

It shall be the responsibility of the owner/developer to show proof of compliance with the requirements of this Ordinance.

10-3 BUILDING HEIGHT

No building shall hereafter be erected, constructed, or altered so as to exceed the height requirement specified in the regulations for the zoning district in which the development is to occur, except as otherwise provided herein.

10-4 HEIGHT EXCEPTIONS

The height requirement for the various districts shall not apply to church spires, belfries, cupolas, penthouses, or domes not used for human habitation, to chimneys, ventilators, skylights, water tanks, parapet walls, cornices, radio and television antennas, or necessary mechanical appurtenances usually carried above the level thereof, provided such features are limited to the height necessary for their proper functioning.

Mechanical equipment, chimneys, air conditioners, elevator penthouses, church spires and steeples, water towers, parapet walls and similar appurtenances are excluded from height restrictions. However, the exclusions apply only to those elements that are appurtenant to the structure. The excluded element shall not exceed the maximum height by more than fifteen (15) feet.

10-5 FIRE HAZARDS

Outside above ground tanks for the storage of gasoline, liquefied petroleum gas, oil, flammable liquids, or gases shall be restricted to the requirements set forth in this Ordinance and state regulations.

The storage, utilization, manufacture of solid materials, or products ranging from incombustible to moderate burning is permitted. The storage, utilization or manufacture of solid materials of products ranging from free or active burning to intense burning is permitted, provided the following condition is met:

(a) Said materials or products shall be stored, utilized, or manufactured within completely enclosed buildings having incombustible exterior walls and protected throughout by an automatic fire extinguishing system. The storage, utilization, or manufacture of flammable liquids or gases which produce flammable or explosive vapors shall be permitted in accordance with the following table for the exclusive of storage of finished products in original sealed containers.

10-6 TOTAL CAPACITY OF FLAMMABLE MATERIALS PERMITTED GALLONS*

	Industries Engaged in Storage and Distribution of Such Materials	Above Ground	Below Ground
(a)	Materials having a flash point above 190 degrees Fahrenheit (87.7878 Centigrade)	Prohibited	100,000
(b)	Materials having a flash point from and including 105 degrees Fahrenheit (40.5556 Centigrade) to and including 190 degrees Fahrenheit (87.7878 Centigrade)	Prohibited	40,000
(c)	Materials having a flash point below 105 degrees Fahrenheit (40.5556 Centigrade)	Prohibited	20,000
	Industries Engaged in Utilization and Manufacture of Such Materials		
(d)	Materials having a flash point above 190 degrees Fahrenheit (87.7878 Centigrade)	10,000	50,000
(e)	Materials having a flash point from and including 105 degrees Fahrenheit (40.5556 Centigrade) to and including 190 degrees Fahrenheit (87.7878 Centigrade)	1,000	20,000
(f)	Materials having a flash point below 105 degrees Fahrenheit (40.5556 Centigrade)	500	10,000

* When flammable gases are stored, utilized or manufactured and measured in cubic feet, the quantity in cubic feet, at S.T.P., permitted shall not exceed three hundred (300) times the quantities listed above.

10-7 WATER POLLUTION

The following shall apply:

(a) No development or operation shall discharge, cause to be discharged, liquid or solid waste into public waters unless it is in conformance with the provisions of the Municipal Separate Storm Sewer System (MS4) permit of the City of Daphne, the Alabama Department of Environmental Management, the Alabama State Board of Health Statutes and any regulations promulgated there under.

(b) The developer or operator shall be responsible for meeting established standards and upon request shall supply the City, County, State, Federal, and/or other permitting authority with the information necessary to determine compliance with these standards within ten (10) business days.

(c) Plans and specifications for proposed sewerage, industrial waste treatment, and disposal facilities shall be submitted to and approval obtained from the Baldwin County Health Department, Daphne Utilities or the appropriate permitting agency.

(d) The City of Daphne's National Pollutant Discharge Elimination System (NPDES) permit-Number AL 00000002, and the MS4 Municipal Separate Storm Sewer System permit shall be adopted as a reference to address storm water discharge within the city limits.

(1) Discharge into the Daphne MS4 (Municipal Separate Storm Sewer System) shall be in compliance with authorized discharges of the National Pollutant Discharge Elimination System (NPDES) permit as provided in part I, Authorized Discharges.

(2) All state NPDES permitted discharges shall be required to connect to the sanitary sewer for additional treatment to minimize the potential for pollutants entering the City of Daphne's MS4.

(3) No person shall discharge or cause to be discharged into the municipal storm drain system or watercourses any materials including but not limited to pollutants or waters containing any pollutants that cause or contribute to a violation of applicable water quality standards, other than storm water.

(4) The connection, use, maintenance or continued existence of illicit connections to the storm drain system is prohibited. This prohibition expressly includes, without limitation, illicit connections made in the past, regardless of whether the connection was permissible under law or practices applicable or prevailing at

the time of connection. A person, firm, corporation, entity or agent is considered to be in violation of the MS4 Ordinance if the person, firm, corporation, entity or agent connects a line conveying sewage or sewerage to the MS4, or allows such a connection to continue.

(5) The commencement, conduct or continuance of any illegal discharge to the storm drain system is prohibited except as prescribed as follows:

(a) Water line flushing or other potable water sources, landscape irrigation or lawn watering, diverted stream flows, rising ground water, ground water infiltration to storm drains, uncontaminated pumped ground water, foundation or footing drains (not including active groundwater dewatering systems), crawl space pumps, air conditioning condensation, springs, non-commercial washing of vehicles, natural riparian habitat or wetland flows, swimming pools (if dechlorinated-typically less than one PPM chlorine), fire fighting activities, and any other water source not containing pollutants.

(b) Discharges specified in writing by the authorized enforcement agency as being necessary to protect public health and safety.

(c) Dye testing is an allowable discharge, but requires a verbal notification to the authorized enforcement agency prior to the time of testing.

10-8 COMPLIANCE

The review of oil and gas exploration and production activities under the requirements of this Ordinance shall not duplicate the regulatory activities of the Alabama Department of Environmental Management, the U.S. Army Corps of Engineers, Alabama Department of Conservation and Natural Resources, State Lands Division or the Alabama State Oil and Gas Board.

The Planning Commission shall permit oil or gas exploration and production in any zoning district following administrative review and assurance that all required federal and state permits have been obtained and that adequate environmental safeguards and guarantees required under the permits have been addressed.

10-9 TRAFFIC IMPACT ANAYLSIS

A traffic impact analysis shall be required for proposed high density and high intensity developments. Said analysis shall be performed by a credentialed professional licensed to perform such service. The results and any corrective measures necessary shall be included as part of, and in addition to, the requirements for preliminary subdivision plat and/or site plan review and approval.

10-10 WELL HEAD PROTECTION AREA (WHPA)

The water supply protection district or the Well Head Protection Area (WHPA) District is created for the purpose of promoting the public health, safety, and welfare through the protection of public water supplies from the danger of water pollution and contamination in compliance with the Safe Drinking Water Act of 1974. Regulations within these areas are established to prevent water quality degradation due to pollutant loadings within aquifer recharge areas and within the watersheds of surface public water supplies.

(a) Boundaries:

The Well Head Protection Area (WHPA) is hereby established. The boundaries shall be amended in the same manner as any other zoning district permitted by the Land Use & Development Ordinance, and may be amended in accordance with the provisions of *Article 3, Amendments to the Zoning District Map*.

The boundaries of the WHPA are determined by the individual public utilities owning and operating public water wells and are based on their individual Source Water Assessment Plans and Well Head Protection Plans. The public water utilities include Daphne Utilities, Park City Water Authority, and Belforest Water Authority.

This district shall be in addition to and shall overlay all other zoning districts where it is applied, so that any parcel of land lying in such an overlay district shall lie in one or more other zoning districts provided for by the Land Use & Development Ordinance. The effect is to create a new district that has the characteristics and limitations of the underlying district, together with the characteristics and limitations of the overlying district.

(b) Prohibitions:

No use shall be hereafter established except in conformity with these regulations, except as otherwise provided herein. It is the responsibility of the developer/owner to show proof of compliance with the requirements.

The following uses are prohibited: manure spreading, animal processing facilities, junk yards, auto salvage yards, graveyards, cemeteries, wood preserving facilities, fertilizer and/or pesticide storage and/or production; any establishment for warehousing, production, processing, assembly, manufacture, preparation, compounding, cleaning, servicing, testing, or repair of materials, goods or products which generates, stores, treats, utilizes and/or disposes of a hazardous or toxic material or waste, as set forth in Title 40, Code of Federal Regulations, Parts 116.4 and 261.30 et seq., shall submit the following information with any application for a proposed development or use.

(c) Exceptions:

(1) Written requests for uses not herein defined or not listed as either a permitted use or a prohibited use may be submitted to the Planning Commission. The Planning Commission shall review said request as per *Article 15, Site Plan Review*.

(2) All requests shall be accompanied by an environmental assessment report that is prepared by a licensed, qualified engineer. Said report shall be forwarded to the applicable water utility for recommendation. Such recommendations shall be considered in the final decision of the Planning Commission.

(3) Any exceptions granted shall be conditional and may include a requirement for environmental and safety monitoring consistent with local, state and federal requirements.

(d) Permitted Uses:

The following are considered permitted uses within the WHPA. Uses not listed below may or may not be permissible, depending upon the determination of Planning Commission as provided in *Section 10-10(b), Well Head Protection Area, Prohibitions.* Uses listed as prohibited, shall not be permitted.

(1) Parks, provided there is a no on-site waste disposal or fuel storage tank facilities associated therewith;

(2) Wildlife areas;

(3) Non-motorized trails, such as biking, nature and fitness walks;

(4) Municipally-sewered residential developments, free of flammable and combustible liquid underground storage tanks;

(5) Agricultural uses in accordance with the Baldwin County Soil Conservation Department's Best Management Practices Guidelines;

(6) Municipally-sewered business developments, except the following. The following uses may be considered by the Planning Commission through the exception process as outlined in Exceptions provided above.

(a) above-ground storage tanks;

(b) asphalt products manufacturing;

(c) automotive service and repair garages, body shops and painting;

(d) chemical storage, sale, processing and manufacturing plants;

(e) dry cleaning establishments;

(f) electronic circuit assembly plants;

(g) electroplating plants;

(h) exterminating shops;

(i) foundries and forge plants;

(j) industrial liquid waste storage areas;

(k) infiltration ponds;

(l) metal reduction and refinement plants;

(m) motor and machinery service and assembly shops;

(n) paint products manufacturing;

(o) petroleum products manufacturing;

(p) photographic studies including the development of film and pictures;

(q) plastics manufacturing;

(r) pulp and paper manufacturing;

(s) storage, manufacture, or disposal of toxic or hazardous materials;

(t) underground petroleum, products storage tanks for industrial, commercial, residential or other uses;

(u) woodworking and wood products manufacturing.

(e) Regulations Applying to WHPA:

In addition to the regulations applicable to the underlying zoning district or districts, the following regulations shall apply to all parcels located within the WHPA and shall be provided to supplement each applicable site development application. Such information shall be referred to the Community Development staff and the appropriate community water utility staff for review in accordance with the provisions of applicable laws and ordinances. When deemed appropriate, Environmental Programs Manager or the appropriate community water utility staff may furnish a copy of the application and supporting information to the Directors of the Alabama Department of Environmental Management, the Alabama State Department of Health, and other appropriate agencies for further review.

(1) A listing of all toxic and hazardous materials and wastes that will be generated, utilized, stored, treated, and/or disposed on site;

(2) A soils report describing the nature and characteristics of the soils covering the site;

(3) A description of surface and groundwater characteristics of the site and the surrounding area within three hundred (300) feet of site boundaries;

(4) A description of all spill prevention, containment, and leakage control measures proposed by the applicant, for all toxic and hazardous materials and wastes generated, utilized, stored, treated, and/or disposed of on the site, including an emergency spill response plan;

(5) A letter from the Environmental Programs Manager of the City of Daphne, concurred with by the applicable water utility authority, that the proposed use complies with all applicable adopted laws, ordinance and regulations;

(6) An inventory of all existing and proposed wells, septic tanks, injection wells, and similar facilities on the site, whether in use or not;

(7) Any other proposed or existing activities on the site that might impact groundwater quality;

(8) A copy of any applicable permits under the National Pollutant Discharge Elimination System, Federal Wetlands regulations, or other provision of the Clean Water Act, or pursuant to the Endangered Species Act, National Environmental Policy Act, or similar legislation intended to address water pollution.

(f) Separation Distances:

The following setbacks shall be maintained and shall not be modified except by the Board of Zoning Adjustment.

MINIMUM SEPARATION FROM A PUBLIC WELL

Proposed Structure	**Setback from Public Well**
▪ Storm sewer drain	50’
▪ Sanitary sewer manhole, main, and/ connection	100’
▪ Sanitary sewer lift station or related equipment for transport and disposal of sanitary sewage	200’
▪ Septic system, tank or drain field receiving less than 8,000 gallons per day	500’
▪ Cemetery or stormwater drainage pond	500’
▪ Land application of municipal, commercial, or industrial waste; industrial, commercial, or municipal wastewater, lagoons or storage structures; manure stacks or storage structures; and septic tanks or soil absorption units receiving 8,000 gallons or more per day	1,000’
▪ Any solid waste storage, transportation, transfer, incineration, processing, one-time disposal, or small demolition facility; gasoline or fuel oil storage tanks; bulk fuel storage facilities and pesticide or fertilizer handling and storage facilities	1,200’
▪ Private Well	See “h” below

In the event that stormwater runoff is directed toward, or may enter, an opening in the ground that provides access to the groundwater table (e.g., well, sinkhole, etc.), the developer shall present a mitigation plan to ensure that no pollutants enter the groundwater table during construction. Additionally, the developer shall, in concert with the applicable community water utility and the Environmental Programs Manager, take steps to ensure that any such openings are protected from any future surface water infiltration. This may be accomplished by permanently closing such openings, or by taking other steps acceptable to the Planning Commission.

(g) Requirements for Existing Facilities:

Existing facilities are defined as those which may cause or threaten to cause environmental pollution within a well field's recharge area which include, but are not limited to facilities with underground storage tanks (U.S.T) facilities with hazardous waste permits granted by ADEM.

Existing facilities shall provide the following:

(1) Copies of all federal, state and local facility operation approvals or certificates and ongoing environmental monitoring results to the Department of Community Development, Environmental Programs Manager and the public community water utility.

(2) Additional environmental or safety structures / monitoring as deemed necessary by the Environmental Programs Manager, Department of Community Development, and the public community water utility which may include but is not limited to stormwater management and monitoring.

(3) Replace equipment or expand in a manner that improves the existing environmental and safety technologies already in existence.

(4) Shall have the responsibility of devising and filing with the Department of Community Development and the public community water utility a Contingency Plan satisfactory to the Environmental Programs Manager and utility for the immediate notification of City of Daphne and utility personnel in the event of an emergency or possible groundwater contamination.

(h) Private Wells:

(1) It is the intent of this Ordinance to eliminate by attrition all private water wells located within the WHPA of the City and where a public community water system is available.

(2) No private water well may be created for human consumption if a public community water system is available and has the capacity to serve the development.

(3) No new private water wells for human consumption may be constructed within the WHPA. Private water wells for any purpose other than human consumption, including irrigation wells, must apply for a Private Well Construction Permit.

(4) Any individual or entity proposing to construct a private water well outside of the WHPA but within the planning jurisdiction of the City,

must apply for and obtain a Private Well Construction permit from the Building Official. The community water utility will review the application and make a determination of the health or contamination hazard posed to the public water supply by the private water well and will provide written recommendation for approval or disapproval to the Building Official.

(5) Determination of health or contamination hazards by Utility may be based on, but not limited to:

(a) Depth and size of proposed private well;

(b) Water production design of proposed private well;

(c) Proximity to public water well;

(d) Quality of existing water supplies;

(i) Enforcement:

(1) In the event that an individual and/or facility causes the release of any contaminants which endanger the WHPA, the individual and/or entity responsible shall immediately stop the release and clean up the release to the satisfaction of the City, Utilities, State and Federal Regulatory Agencies.

(2) The individual/facility responsible for the contamination shall be responsible for all cleanup, and may include all of the following:

(a) City and/or Utility consultant fees for the oversight, review and documentation.

(b) The cost of City or Utility equipment employed.

(3) Following such release or discharge, the City may require additional testing, monitoring and/or bonds/securities.

10-11 DUMPSTERS, TRASH REFUSE & RECYCLING CONTAINERS

For any commercial, institutional, industrial or multi-family development there shall be provided and maintained properly enclosed trash/garbage disposal and recycle containers. All nonresidential uses utilizing city garbage containers shall enclose all refuse collection and storage areas in accordance with this subsection.

(a) Such containers shall be located behind the front building line; and other such considerations shall be given to a location where the containers can be adequately screened from public view.

(b) Trash/garbage disposal shall be set on concrete pads sized as recommended by the disposal company and screened on three (3) sides to fully screen all refuse containers from public view.

(c) Walls shall be constructed of masonry materials that match the main colors and materials of the associated building they serve. Opaque gates, designed to complement the screen, shall be installed for access.

(d) Any enclosure intended for screening dumpsters, refuse areas, or recycling containers that contains a compaction unit shall include a floor drain within the containment pad that is tied directly to the sanitary sewer system in accordance with the standard specifications for sanitary sewers.

(e) Any enclosures provided for restaurants or other eating establishments shall be sized to accommodate the storage of grease barrels in addition to dumpsters and recycling containers.

(f) To allow for dumpster gates to remain closed as often as possible, either a pedestrian door or a wall offset for pedestrian access shall be provided.

(g) Screening shall not compromise safety by obstructing any required clear sight triangle, by blocking access to any above-ground, pad-mounted transformer (minimum clear distance required by the utility company shall be provided), nor by impeding or diverting the flow of water in any drainage way.

(h) The minimum height for screening shall be that which is sufficient to visually separate the uses and shall also meet the following standards:

(1) Fences used to screen dumpsters shall be at least two (2) feet higher than the container.

(2) Berms used for required screening shall be a minimum height of four (4) feet with a maximum slope of three to one (3:1). Berms in excess of four (4) feet shall have a maximum slope of four to one (4:1) measured from the lot line. Berms shall be landscaped and stabilized to prevent erosion.

(3) Shrubs used for required screening shall be evergreen; at least thirty (30) inches high when installed; spaced closely together so as to create a hedge, but not farther than five (5) feet on center; and be shrub species that shall attain an average normal growth height of five (5) feet to six (6) feet within four (4) years.

(4) Trees used for required screening shall be evergreen and at least six (6) feet in height at installation.

ARTICLE XI
MINIMUM STANDARDS AND REQUIRED IMPROVEMENTS FOR SUBDIVISIONS AND COMMERCIAL SITE DEVELOPMENTS

11-1 SUITABILITY OF LAND

The Planning Commission shall not approve the subdivision of land or site development plans if, from adequate investigations conducted by all public agencies concerned, it has been determined that it is not in the best interest of the public or the proposed development is not suitable for platting or subdividing purposes. The design and improvements of all subdivisions and developments shall meet all State and Baldwin County Health Department requirements and proof thereof shall be submitted. All improvements shall be designed and sealed by a licensed professional engineer. The engineer shall carry Errors and Omissions Insurance at a minimum coverage of at least one million dollars ($1,000,000).

11-2 LAND SUBJECT TO FLOODING

Land subject to flooding or inadequately served by drainage facilities shall not be acceptable for subdivision unless the subdivider agrees to make such improvements as will render the land fit for occupancy in conformity with the National Flood Insurance Program. Fill may not be used to raise land in areas subject to flood and/or excessive erosion, unless the fill proposed does not restrict the natural flow of water, advance erosion, and unduly increase flood heights. The use of staining materials shall be prohibited in fill activity within coastal bluff areas or flood zones.

To ensure proper development in flood prone areas, the Planning Commission shall require the subdivider to provide elevation and flood profiles sufficient to demonstrate the sites will be free from the danger of flooding.

If a stream flows through or adjacent to the proposed subdivision, the plat shall provide for an easement or right-of-way along the stream for a floodway. For the smaller streams, the plat shall also provide for channel improvement to enable them to carry all reasonable floods within banks. The floor elevations of houses shall be high enough to be above the regulatory flood. The flood way easement shall be wide enough to provide for future enlargement of the stream channel as adjacent areas become more highly developed and runoff rates are increased.

Approval will not be given for streets within a subdivision which would be subject to excessive inundation or flooding.

11-3 CONFORMANCE WITH EXISTING PLANS

Proposed improvements in all subdivision developments within the extraterritorial planning jurisdiction shall be in conformance with existing approved plans, maps, ordinances, and design standards of the City of Daphne or Baldwin County, whichever is more restrictive.

Any subdivision recorded prior to the enactment of this Ordinance shall remain a legal subdivision unless a re-plat of said subdivision is submitted and approved.

11-4 PENALTIES

The developer, owner, or agent of the owner of any land to be subdivided in the corporate limits or extraterritorial planning jurisdiction who transfers, sells, agrees to sell, or negotiates to sell such land by reference to an exhibition of, or by other use of a plat to subdivide such land before such plat has been approved by the Planning Commission and recorded in the Office of the Probate Judge of Baldwin County shall forfeit and pay a penalty of one hundred dollars ($100.00) for each lot or parcel so transferred or sold, and the description by metes and bounds in the instrument of transfer, or other document used in the process of selling or transfer shall not exempt the transaction from such penalties.

The City of Daphne, through its attorney or other designated representative, may enjoin such transfer, sale, or agreement by appropriate action.

No plat of a subdivision in the corporate limits or its extraterritorial planning jurisdiction shall be filed by a subdivider in the Office of the Probate Judge until it shall have been submitted to and approved by the Planning Commission and such approval entered in writing on the plat by the Chairman, Vice-Chairman, or Secretary of the Commission. The Probate Judge shall not file or record a plat of a subdivision which does not have the approval of the Planning Commission.

Any building or structure erected or to be erected in violation of subdivision regulations shall be deemed an unlawful building or structure, and the Building Official may bring action to enjoin such erection or cause it to be vacated or removed.

11-5 SUBDIVISION EXCEPTIONS AND EXEMPTIONS

Whenever the strict compliance with these regulations would result in an extraordinary hardship or injustice to the subdivider because of topography, unusual size or shape of the property, or unusual conditions in surrounding property of development, the Planning Commission may modify or waive such regulations so the subdivider may subdivide his property in a reasonable manner provided that such modification or waiver shall not nullify the intent or purpose of the subdivision regulations, the public welfare, and interest of the City of Daphne shall be protected. Any such modification together with reasons therefore shall be so noted in the minutes of the Planning Commission.

(a) Modifications/Waivers:

In granting modifications or waivers, the Planning Commission may impose such other reasonable conditions as will, in its judgment, justify such modification or waiver and still substantially maintain the objectives of these regulations. Each modification or waiver of the regulations sought by a subdivider shall be applied for and acted upon individually by the Planning Commission.

(b) Subdivision Exemptions:

The sale or exchange of lots or parcels of land or the relocation of an interior lot line between adjoining property owners may be exempt from these regulations by the Planning Commission, provided no additional lots are created, none of the lots affected by the sale, exchange or relocation of interior lines are reduced below the minimum size requirements of the zoning district in which the division is to occur. No existing easement shall be vacated or moved without the recommendation of the Planning Commission and the acceptance by resolution of the City Council as outlined in the applicable sections of this ordinance.

11-6 MINIMUM STREET REQUIREMENTS

	Major Street	**Collector Street**	**Local Street**	**Cul-de-Sac[1] (Turn around)**	**Cul-de-Sac[1] (Turn around w/ 20-ft island)**	**Hammer Head Turnaround**	**Alley**
Minimum Right-of-Way:	100’	60’	50’	60’ (120’ diam.)	70’ (140’ diam.)	120’	30’
Minimum Asphalt Width (ft)[2]:	12’ per lane	12’ per lane	22’	48’ (93’ diam.)	56.5’ (113’ diam.)	20’	20’
Maximum Grade[3]:	5%	10%	15%	3%	3%	3%	10%
Minimum Angle of Intersection:	80◦	60◦	60◦	60◦	60◦	90◦	60◦
Minimum Intersection Offset	150’	150’	150’	150’	150	n/a	150’
Minimum Curb Radius at Intersection:	40’	30’	25’	25’	25’	28’	20’
Minimum Horizontal Curve Radius:	300’	250’	100’	100’	120’	0’	100’
Minimum Reverse Curve Tangent:	100’	100’	100’	120’	120’	0’	100’

1 Cul-de-sacs shall not be longer than one thousand three hundred twenty (1320) feet measured from the intersecting street to the center of the turnaround.

2 Measured from toe of curbing. Minimum twenty-four (24) feet combination curb and gutter or twenty-four (24) feet valley gutter. Other curb types must be submitted to Public Works Director for approval.

3 May vary with topography subject to Planning Commission approval based on recommendation of Public Works Director and Director of Community Development.

11-7 TYPICAL ILLUSTRATIONS

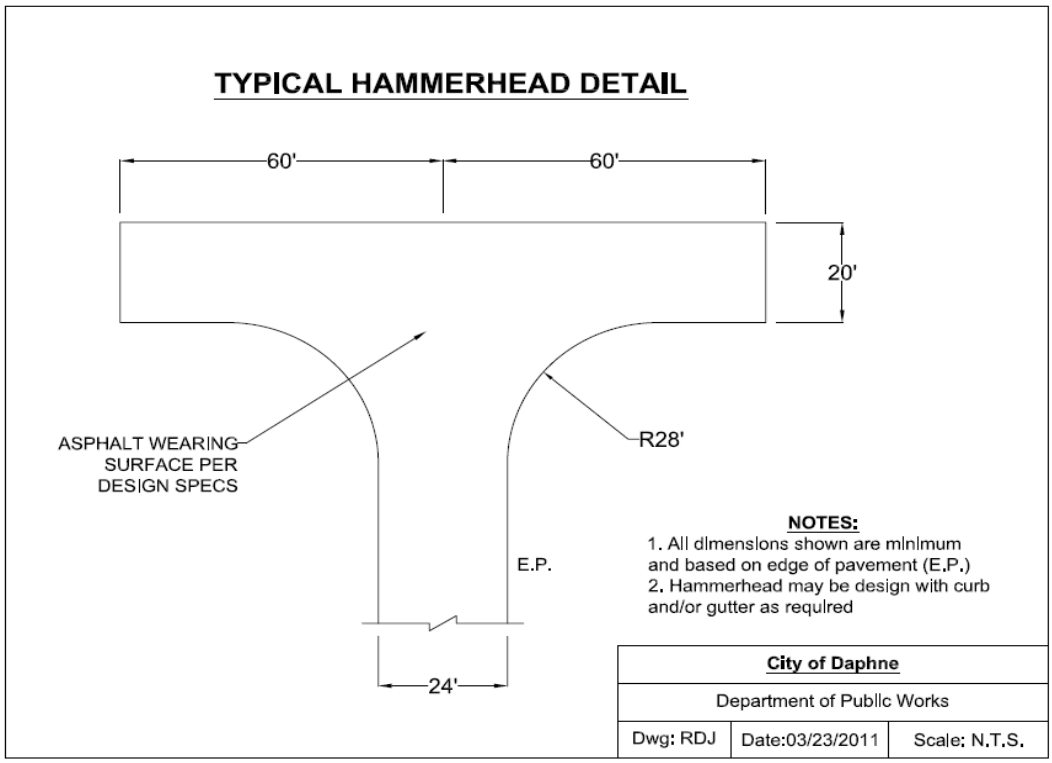

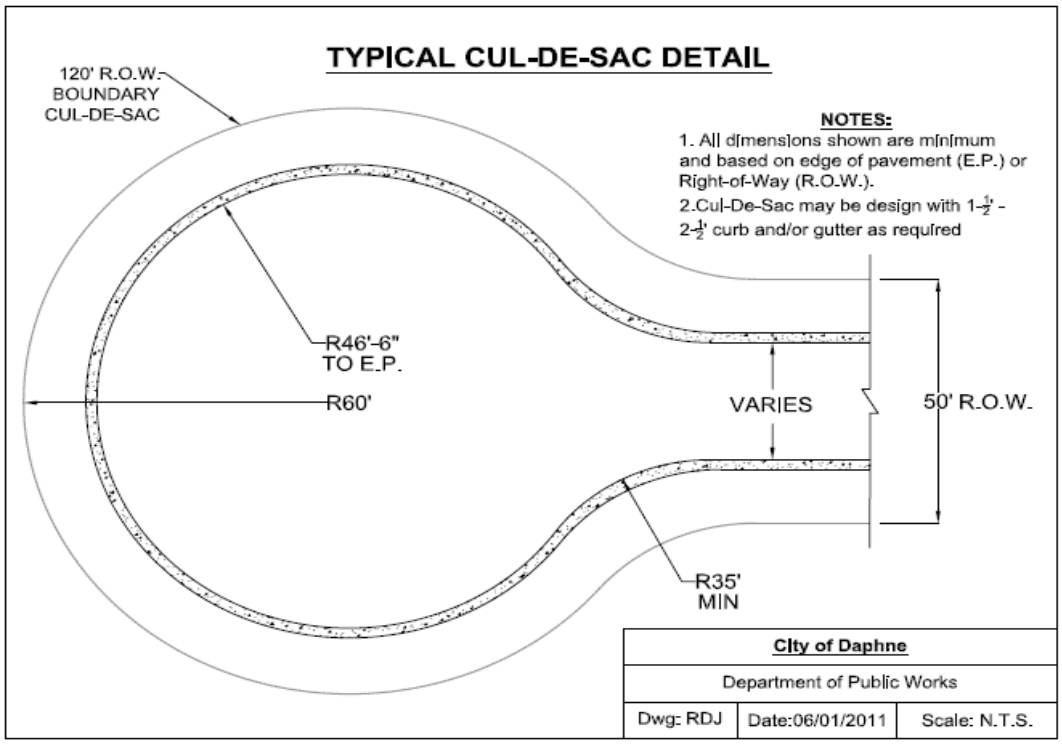

11-8 IMPROVEMENT STANDARDS FOR STREETS

Any proposed streets in a subdivision, planned unit development, mobile home park, apartments, townhouses, condominiums, patio homes, business, commercial, or industrial developments whether such streets are to be private or dedicated for public use shall be paved and adequately drained.

This requirement is not subject to modification by the Planning Commission. The developer/owner shall construct such streets in accordance with good engineering practices and the standards prescribed herein in these regulations, as required by the Director of Community Development or her/his duly authorized representative, State, County Highway Department, and the department of the respective utility.

The full width of the right-of-way shall be graded including the subgrade of the areas to be paved. This requirement may be modified for the purpose of preserving the natural beauty of the area. The minimum Roadway Build-up is as follows based on roadway classification:

(a) Major and Collector Street:[1, 2]

(1) 429-A Improved Bituminous concrete wearing surface layer, one-half (1/2) inch maximum aggregate size mix, ESAL Range B (110 lb/sy), one-hundred and ten pounds per square yard.
(2) 405-A Tack coat, spread rate of 0.10 gal/sy.
(3) 429-B Improved bituminous concrete binder layer, three-quarter inch maximum aggregate size mix, ESAL, Range B 220 lb/sy.
(4) 401-A Bituminous Treatment type “A” (0.25 gal/sy).
(5) 301-A Compacted Granular Soil Base Course (sand/clay) type “A” minimum of 2-4 feet lifts of compacted thickness; or,
(6) 301-B Crushed aggregate base course (limestone) type “B” minimum 6-inch compacted thickness (if using this method, delete 401-A treatment.

(b) Local Street and Hammerhead Turnaround:[1, 2]

(1) 429-A Improved Bituminous concrete wearing surface layer, one-half (1/2) inch maximum aggregate size mix, ESAL Range B (110 lb/sy), one-hundred and ten pounds per square yard.
(2) 405-A Tack coat, spread rate of 0.10 gal/sy.
(3) 429-B Improved bituminous concrete binder layer, three-quarter inch maximum aggregate size mix, ESAL, Range B 165 lb/sy.
(4) 401-A Bituminous Treatment type “A” (0.25 gal/sy).
(5) 301-A Compacted Granular Soil Base Course (sand/clay) type “A” minimum of 2-4 feet lifts of compacted thickness; or,
(6) 301-B Crushed aggregate base course (limestone) type “B” minimum 6-inch compacted thickness (if using this method, delete 401-A treatment.

(c) Alley:[1, 2]

(1) 429-A Improved Bituminous concrete wearing surface layer, (3/4), three-quarter inch maximum aggregate size mix, ESAL Range B (165 lb/sy), one hundred sixty five pounds per square yard.
(2) 401-A Bituminous Treatment type "A" (0.25 gal/sy).
(3) 301-A Compacted Granular Soil Base Course (sand/clay) type "A" minimum of 2-4 feet lifts of compacted thickness; or,
(4) 301-B Crushed aggregate base course (limestone) type "B" minimum 6-inch compacted thickness (if using this method, delete 401-A treatment.

Notes

[1] Base design shall be based upon the in-situ soil conditions.

[2]Other pavement designs may be submitted for Planning Commission approval. Such options shall be contingent upon the Director of the Department of Community Development and the Director of Public Works.

If curbs and gutters are required, they must be in conformance with approved City, State, and County Highway Department standards.

All grading in the subdivision shall be related to the topography and environmental features of the surrounding area. Unpaved areas within a dedicated street right-of-way shall be graded with a minimum of 2 (two) inches of top soil and permanently stabilized with ground cover in a manner that will enhance the appearance of the environment. The shoulder at the edge of pavement or at back of curbing shall be stabilized with a minimum of two (2) courses or sod for the entire length of the roadway.

All water mains, sanitary sewers and laterals, and storm sewers shall be installed as necessary to prevent the future cutting of the pavement of any street, sidewalk, or other required pavement.

In order for the City of Daphne to provide regular maintenance of street lighting, said lighting shall be purchased through and installed by Riviera Utilities. Regular maintenance does not include replacement of lamps, luminaries or standards which are damaged or destroyed due to vandalism or any other cause beyond the utility's control. Such facilities damaged or destroyed under such circumstances shall be replaced by the utility company at the property owner's expense.

11-9 ISSUANCE OF SITE DISTURBANCE PERMIT

Each person, firm, corporation, utility, entity, or agent thereof engaged in any site preparation and/or construction activities shall acquire a Site Disturbance Permit from the Community Development Department prior to commencement of such activities as established pursuant to the provisions of this Article and no such activity shall commence prior to the approval of a preliminary plat or site plan by the Planning Commission.

Where applicable, any and all state and/or federal permits for construction related activities shall be obtained and submitted to the City prior to issuance of the site disturbance permit. The owner or developer shall provide to the Department of Community Development, the appropriate signed application form, a certified cost estimate for site work, the fee for a site disturbance permit as enumerated in *Article 34, Schedule of Fees*, and proof of the contractor's Daphne business license.

Whenever a major development, one which is five acres (5) or more, or any project deemed appropriate by the Director of Community Development, is proposed within the corporate limits, the developer or his/her authorized engineer should contact the Planning Coordinator to arrange a pre-construction conference. Said meeting shall occur after site plan approval and prior to the issuance of a site disturbance permit. Participants shall include the developer, his engineer and his contractors, the representatives from the Departments of Community Development, Public Works, Building Inspections; Riviera Utilities, Daphne Utilities, any other applicable public or private utility company, local, state, and/or federal agency. At the pre-construction conference, participants will discuss details related to permitting, construction safety, general expectations during construction, final inspection protocol, etc.

11-10 CONSTRUCTION, TESTING AND INSPECTION OF STREETS

An independent testing laboratory shall conduct all the necessary tests to determine if the streets are installed to minimum design standards. Results shall be furnished to the Department of Community Development prior to final subdivision plat approval. These tests shall be conducted at the expense of the developer/owner.

(a) Testing:

All testing shall be conducted by an independent testing laboratory approved in writing by the Public Works Director or his/her designee. The testing laboratory shall have the proper equipment and personnel necessary to perform said testing of required improvements and shall be certified by the Alabama Department of Transportation. Proof of certification must be submitted to the Public Works Director or his/her designee, prior to said approval.

The Public Works Director shall determine which tests shall be scheduled and performed. A schedule of proposed testing must be submitted to the Public Works Director or his/her designee for approval at the time of the Pre-construction Conference. The tests normally consist of, but are not limited to:

(1) Soil gradation;

(2) Optimum moisture content tests on embankment, subgrade and base material;

(3) Soil compaction test on subgrade and base material;

(4) In-place asphalt density analysis of road building materials;

(5) Twenty-eight (28) day compressive strength of concrete;

(6) Hydro-static test of water and pressurized sewer system as required by utility provider;

(7) Air test of gravity sewer line as required by utility provider.

The developer shall notify the Public Works Director, or his/her designee, twenty-four hours prior to any required tests. Copies of all test reports are to be provided to the Public Works Director before additional construction occurs. In the event problems exist that require remedial actions or design, the developer shall be required to submit revised engineering plans to the Public Works Director before construction will be allowed to proceed.

(b) Clearing and Grubbing:

All rights-of-way shall be cleared of all vegetation, trees, stumps, rocks and other objectionable or unsuitable material prior to grading or filling unless otherwise approved, in writing, by the Public Works Director or his/her designee.

(c) Embankment Sections:

The Public Works Director will have the right to approve all borrow sources; however, this does not relieve the developer from full responsibility for the quality of material used. Roadway fill or embankment of earth material shall be placed in uniform layers, full width, and not exceeding six inch thickness (loose measurement). Each layer shall be compacted so that a uniform specified density is obtained. Compaction tests shall be run at the frequency and location as directed by the Public Works Director or his/her designee. Additional layers of fill shall not be added until directed by the Public Works Director. For all density requirements refer to the current Alabama Department of Transportation "Standard Specifications for Highway Construction".

(d) Subgrade:

The subgrade shall be compacted and properly shaped prior to the placing of base materials. The top six (6) inches of the roadbed shall be modified, with the work being performed under Section 230 Roadbed Processing, of the current Alabama Department of Transportation "Standard Specifications for Highway Construction". It shall be full width of regular section and extend eighteen (18) inches outside of curb sections of thirty (30) inches from the edge of asphalt, whichever is greater. The embankment or subgrade shall be inspected by proof rolling, under the supervision of the Public Works Director or his/her designee, with a fully loaded (minimum 20 CY) tandem axle dump truck to check for soft or yielding areas. Any unstable materials shall be removed and replaced with a suitable material compacted to a density as required.

(e) Base:

Base course shall meet the requirements according to the current Alabama Department of Transportation "Standard Specifications for Highway Construction". Base course shall have a minimum thickness as required by *Section 11-8, Improvement Standards for Streets,* of these regulations and shall extend twelve (12) inches outside of curb sections or twenty four (24) inches from the edge of asphalt, whichever is greater. The density requirements for compaction shall be in accordance with the current Alabama Department of Transportation "Standard Specifications for Highway Construction". Developer/Engineer may submit an alternate base design method for approval by the Public Works Director or his/her designee. Design shall be based on a proven and accepted engineering test or method for the site conditions that exist.

(f) Roadway Pavement:

All roads and/or streets shall be paved and comply with the following:

(1) All roads shall be improved according to the standards outlined in *Section 11-8, Improvement Standards for Streets,* of these regulations;

(2) Prior to the placement of pavement, a bituminous treatment A (prime) shall be placed and inspected by the Public Works Director or his/her

designee;

(3) The finished wearing surface shall be uniform and free of defects. The Public Works Director or his/her designee may require additional density tests in areas that appear questionable.

When all required improvements are installed, the developer/owner shall call for a final inspection. The Public Works Director or his/her duly authorized representative shall inspect the site to determine if the required improvements are satisfactorily installed according to the plans and specifications.

11-11 SIDEWALKS

(a) It is the intent of this section to require the installation of concrete or asphalt sidewalks on both sides of the street in residential and commercial subdivisions in order to encourage vehicular and pedestrian connectivity within the City of Daphne. It is also the intent of this section to require the installation of sidewalks in commercial and or industrial site developments. Sidewalks are counted toward the improvement standards of all streets and shall be installed prior to the issuance of a Certificate of Occupancy unless an agreement for future installation has been presented by the developer. In no case shall the City Daphne be responsible for the installation of sidewalks within any subdivision development.

(b) Construction of sidewalks, shall comply with the following standards:

Type of Subdivision	**Sidewalk Width**
Low Density Residential	4 feet
High Density Residential	5 feet
Commercial or Industrial	6 feet

(c) Sidewalks shall provide pedestrian traffic and design shall encourage safe means of access eliminating conflicts between vehicular and pedestrians. Innovative design measures which would encourage the use of pervious material may be considered by the Planning Commission in lieu of typical sidewalk installation. Due consideration shall be given to the feasibility of sidewalk installation depending upon the proposed development. Except where exempted or modified by the Planning Commission, sidewalks shall be installed as follows:

(1) Along the perimeter of all developments where adjacent to City right-of-way.
(2) Along the right-of-way where adjacent to the perimeter of any common area within the development; except where walking trails/paths are incorporated into the design for formal/recreational open space as provided in *Section 11-14, Special Provisions* herein. Final plat shall not be approved until this provision is satisfied.
(3) Along the right-of-way within each residential subdivision development.

(4) Sidewalks shall be constructed with reinforced concrete that has a minimum twenty eight (28) day compressive strength of three thousand pounds per square inch (3000 psi), and shall be in accordance with City specifications and these regulations, unless otherwise approved by the Planning Commission.

(5) New sidewalks shall connect to any adjacent sidewalks and/or bike paths and shall be interconnected within said development to allow for sufficient pedestrian access.

(6) All sidewalks shall be in accordance with current ADA (Americans with Disabilities Act) requirements.

(d) Restrictive covenants, as required in *Article 17, Subdivision Review*, shall provide for the installation sidewalks by individual home owners or the developer:

The Planning Commission may, at its discretion, approve a final plat prior to the installation of sidewalks upon receipt of an agreement to install sidewalks, a cost estimate for sidewalk installation and a surety in the amount of two hundred percent (200%) of the estimated cost and shall not expire within a twenty-four (24) month period.

(e) Additional Provisions:

(1) Subdividers may also be required to provide access through greenways and common areas.

(2) Trail design shall be reviewed and approved by the Planning Commission. Trail width shall be at least ten (10) feet.

(3) Walkways, with the exception of dedicated trail, shall be maintained by the adjacent property owners.

(4) Pedestrian crosswalks, not less than ten (10) feet wide, shall be required where deemed necessary to provide circulation or access to schools, playgrounds, shopping centers, bus stops, and other community facilities.

11-12 WATER CONNECTIONS

(a) Connection to Public or Private Water System:

Developments, individual lots, or parcels shall be properly connected to a public or private community water system where such system borders the development, lot line, or is available and the appropriate utility has the capacity to provide service. The lines for both domestic use and fire protection shall be approved by a public or private community water supply and constructed in such a manner as to adequately serve all of the lots located within the subdivision. Water wells for purposes other than human consumption may continue to be used. If a well is required for each lot, the location, construction, and use of such well shall also meet the Baldwin County Health Department requirements. If a well is to serve more than one lot, a public community water system acceptable by and properly permitted by ADEM shall be required.

It is the intent of this Ordinance to eliminate by attrition, all existing private wells, in areas where public or private community water systems are available. Therefore, at such time as any private well fails to function properly, the owner must connect to the public or private community water system where such systems borders any development, lot line, or are available and the appropriate utility has the capacity to provide the service.

All developments shall have adequate potable water and adequate water for fire protection. In all cases, the developer, property owner, or agent shall submit written documentation verifying that the public or private water provider is willing and able to provide service to the development. Said documentation shall be on the utility company's letter head addressed to the Department of Community Development.

When all water lines and connections are installed, the developer/owner shall call for final inspection prior to final plat approval or prior to the issuance of the Certificate of Occupancy. The appropriate utility provider representative shall inspect the site to determine if the required improvements are satisfactorily installed according to the plans and specifications presented to the Planning Commission.

11-13 SEWER CONNECTIONS

(a) Connection to Sanitary Sewer System Requirements

(1) A centrally connected sanitary system shall be constructed and installed and connected to a public sanitary sewer system where such system is reasonably available. A public sanitary sewer system is considered to be reasonably available if the system is located within an easement or right-of-way adjacent to or within five hundred (500) feet of the development or where such sanitary sewer system borders the development, individual lots, or parcels and the appropriate entity has the capacity to provide the service.

(2) Sanitary sewer collection systems for multiple customers shall be gravity systems. Low pressure systems, i.e., multiple grinder pumps, shall not be acceptable within the City of Daphne or its planning jurisdiction except with the approval of the Planning Commission. Consideration will be given to areas where access for proper maintenance to sewer mains is impractical and cost prohibitive as determined by the City or Daphne Utilities. The project design engineer shall provide written certification to justify the need for a multi-customer low pressure system. When approved as an acceptable system in lieu of a gravity system, low pressure systems shall be constructed to provide flow conditions that will minimize the development of corrosive and odor conditions from H2S and to prevent the development of sewage BOD5 (biochemical oxygen demand) concentrations greater than three hundred and fifty (350) mg/l.

(b) Regulation of Septic Tanks:

The Board of Health of Baldwin County or its duly authorized representatives being specifically empowered and directed by state law, are hereby empowered and directed by the City to making such inspections and investigations of and to take such legal steps as may be necessary to regulate and control the type, construction, reconstruction, location, use and maintenance of all septic tanks and all appurtenances thereto or used in connection therewith in the City.

(c) Inspection of Septic Tanks:

All septic tanks within the City shall be subject to inspection or investigation by the Board of Health or its duly authorized representative(s) at all reasonable times and the Board of Health or its representative(s) shall have the right to enter upon or into all property, premises or building for such purposes.

(d) Permit for Construction and Maintenance of Septic Tank:

It shall be unlawful and an offense against the City for any person to construct a septic tank on any property within the City without first having obtained a permit from their County Board of Health or its duly authorized representative.

(e) Low Pressure Systems also known as Grinder Pumps:

(1) Except as noted above, low pressure systems may only be installed with the approval of the Planning Commission. Construction of low pressure sanitary sewer systems, selection and installation of individual grinder pumps shall conform to the Utilities Board of the City of Daphne's Standard Constructed Specifications, latest edition, which is hereby adopted by reference.

(2) The Building Official or designee thereof or City Engineer shall have the authority to determine if selection and installation of grinder pumps meets the minimum requirements of these specifications.

11-14 SPECIAL PROVISIONS

(a) Utility Placement:

All water, sewer, gas, electric power, telephone, cable TV, and other utility lines shall be installed underground by the developer and/or owner in all new residential, commercial, or industrial developments, expansions and/or renovations of existing uses; said developments shall be connected to a central distribution system, unless for good reasons other than cost, the Planning Commission approves a modification or waiver of this requirement in part or in whole, or if a special condition requires otherwise.

(b) Drainage and Utility Easements:

Easements having a minimum width of ten (10) feet and located along the side or rear lot lines shall be provided as is necessary to utility lines, underground mains, and cables. Where a subdivision is traversed by a water course, drainage way, channel or stream, there shall be provided a storm water or drainage right-of way-of adequate width, no less than five (5) feet to accommodate normal runoff. Said right-of-way shall be at a location one (1) foot above established high water or flood elevation.

(c) Location of Fire Hydrants:

Roadway fire hydrants shall be installed along each street at the center of each block and at one corner of each roadway intersection, provided, however, that in no event shall fire hydrants be spaced so that any fire hydrant is located more than

five hundred (500) feet from another fire hydrant. The water supply and pressure shall be sufficient to provide adequate fire protection and the future needs of the intended land use. Additional fire hydrant placement may be required on the interior of developed lots pursuant to local ordinance and fire regulations as adopted by the City of Daphne.

(d) Location of Street Lighting:

Lighting shall be installed at all intersections, curves, and cul-de-sacs. If additional lighting is consistent with safety and other community needs are deemed necessary, the Director of Community Development shall require the subdivider to present a street lighting plan developed in conjunction with the appropriate utility company having jurisdiction within the area.

If the City of Daphne is to provide regular maintenance of street lighting, said lighting shall be purchased through and installed by Riviera Utilities. Regular maintenance does not include replacement of lamps, luminaries or standards which are damaged or destroyed due to vandalism or any other cause beyond the utility's control. Such facilities damaged or destroyed under such circumstances shall be replaced by the utility company at the property owner's expense.

(e) Placement of Street Signage for Subdivisions and Developments:

Proper signage in accordance with the latest edition of the "Manual of Uniform Traffic Control Devices" (MUTCD) as adopted by Alabama Department of Transportation (ALDOT) shall be installed prior to receiving final plat approval and maintained in all subdivisions until such time as roads are dedicated and accepted for maintenance by the City Council resolution. All proposed signage shall be shown and detailed on the construction plans. The following minimum standards shall be adhered to:

(1) R1-1 Stop Sign:

High intensity prismatic-minimum 0.080 inch thick, thirty (30) inches for all internal street intersections; thirty-six (36) inches for all intersections with existing city, county, state and federal roads.

(2) Street Name Sign:

Nine (9) inch aluminum extruded blade, high intensity prismatic, six (6) inch tall all-capital lettering on green background for streets proposed to be public; six (6) inch tall white all-capital lettering on blue background for streets proposed to remain private. Brackets: Vulcan type VS-8 vandal proof or an approved equivalent.

(3) All other signs, engineering grade or better:

Minimum 0.080 inch thick.

(4) Post for Street Signs:

Minimum ten foot (10-ft) long, two and three eighth (2-3/8th) inch galvanized round post. Street signs must be mounted on separate post from the stop sign, unless approved by Public Works Director. If street signs and stop signs are approved to share the same post, in no case shall the street sign be attached directly to the stop sign. Stop signs shall be attached using a flanged bracket such as Vulcan Part #222491-501 or equivalent.

(5) Post for all Other Signs:

#3 Galvanized U-channel of appropriate height embedded not less than three (3) feet below the finished grade elevation.

(f) Location of Concrete Monuments and Pins:

Right-of-way and property line monuments shall be placed in each subdivision. Concrete monuments three-and-one-half (3-1/2) inches square and two (2) feet long shall be driven flush with the grade at the intersection of all street rights-of-way and radius points.

Iron pins one-half (½) inch in diameter and two (2) feet long shall be driven flush with the grade at each lot corner and at each point where the property line changes direction.

(g) Annexation Provision for Extraterritorial Planning Jurisdiction Subdivisions:

Proposed residential and/or commercial subdivisions located in the extraterritorial planning jurisdiction which are contiguous to the corporate limits and are served by a public community water and sanitary sewer system of the Utilities Board of the City of Daphne, shall be required to annex into the City of Daphne prior to approval of said subdivision, if it is deemed by the Planning Commission to be in the best interest of the City.

(h) Common Open Space Provisions:

(1) Common open space set asides shall include formal open space or informal open space to be used for active or passive recreational uses or for resource protection purposes.

(2) Each area shall be appropriately designated on the subdivision plat and assigned a lot number.

(3) Notes shall be placed on the plat indicating ownership of common open space areas and shall reference subdivision restrictive covenants by instrument number as recorded in the Baldwin County Probate Records.

(4) A note shall be provided on the plat indicating that the City of Daphne shall not maintain any common open space areas.

(5) Where relevant and appropriate, open space areas shall be located so as to be readily accessible and useable by residents of the development.

(6) To the maximum extent practical, a portion of the open space should provide focal points for the development.

(7) Open space set-aside areas shall have at least one direct access to a public right-of-way.

(8) The lands shall be compact and contiguous unless the land is used as a continuation of or link to an existing or planned adjacent open space resource or where specific natural or topographic features require a different configuration.

(9) In all developments, due regard shall be shown for all natural features such as large trees, water courses, historical spots, and similar community assets which, if preserved, will add attractiveness and value to the property.

(10) In a residential subdivision or residential development of more than five (5) acres in size, the subdivider shall provide suitable recreation land of at least fifteen percent (15 %) of the total area of land to be subdivided.

(11) In subdivisions five acres in size or less, the subdivider shall provide suitable recreation land of at least ten (10%) percent of the total area of land to be subdivided.

(12) A residential subdivision which is to be developed in phases or units shall at the time of the submittal of the preliminary plat make an appropriate agreement with the Planning Commission to assure that the dedication of the required land is to be provided. Said agreement shall be based upon the Planning Commission's approval of a master plan for the overall site.

(i) Informal Open Space

Informal Open Space shall be areas designated on the subdivision plat for undisturbed natural features including: tree groves, wetlands, rock outcrops, pastoral areas, floodplains, lakes, streams, rivers, and wildlife habitat; utility and conservation easements; and for passive recreation uses including walking trails, pathways, and picnic areas. Detention ponds and related storm water facilities may be included in areas designated as informal open space.

(j) Formal Open Space/ Recreational Provisions

Landscaped formal open space/recreation areas, comprising not less than ten (10) percent of all common area required by this Article, may include the following: pedestrian access walkways, children play areas, general landscaped areas, flower gardens, and areas for passive recreation, swimming pools, including accompanying accessory structures, and areas for organized sports, any other areas suitable for the common area enjoyment of the residents.

(1) Due consideration shall be given to the allocation of areas centrally located and of adequate size for a playground or park for local or neighborhood use, and other public service areas including but not limited to pools, ball fields, playgrounds, tennis courts, jogging trails, and clubhouses used primarily for recreation purposes. Additionally, open areas that include arranged plantings, gardens, gazebos or similar structures, fountains, sculptures, and other forms of public art may be credited toward this provision.

(2) Where such features provide a clear community benefit, the Planning Commission may credit towards the minimum recreation provision any plazas and sidewalk areas exceeding the minimum sidewalk width requirements that contain at least four of the following features towards formal open space area requirements: seating elements; specialized or decorative paving features; pedestrian lighting beyond that required to illuminate public rights-of-way; canopies, awnings, or overhangs to shield pedestrians; street furnishings, including but not limited to planters, waste receptacles, bicycle racks, drinking fountains, or shelters for persons utilizing public transit; or informational kiosks.

(3) Detention ponds shall not be counted towards formal open space/recreational area provisions; however, retention ponds centrally located and accessible to the residents may be counted towards these recreation provisions. One-half (1/2) of the land area occupied by retention ponds and other bio-retention devices shall be counted toward these provisions.

(4) All formal open space/recreational areas shall be suitably developed for neighborhood use prior to final approval of the subdivision except where an agreement has been established for implementation in several phases.

ARTICLE XII
ESTABLISHMENT OF DISTRICTS

12-1 GENERAL PROVISIONS

The City of Daphne is hereby divided into zoning districts as described below and as shown on the official Zoning District Map, for the purpose of:

(a) Providing a residential environment free of incompatible uses and safe from natural and manmade hazards.

(b) Promoting, where possible, planned residential, commercial, and industrial areas in appropriate locations with appropriate standards and minimum service cost to local government.

(c) Providing a compact convenient urban pattern for urban areas.

(d) Providing a level of flexibility of control sufficient to promote innovation and creativity in community development and to encourage maximum living comfort and convenience at the lowest cost.

(e) Promoting the Comprehensive Plan for the City of Daphne.

12-2 LIST OF ZONING DISTRICTS

Residential Zoning Districts
R-1, Low Density Single Family Residential District
R-2, Medium Density Single Family Residential District
R-3, High Density Single Family Residential District
R-4, High Density Single & High Density Multi-Family Residential District
R-5, Mobile Home District
R-6(D), Duplex-Two Family District
R-6(G), Garden or Patio Home District
R-7(A), Apartment District
R-7(M), Mid-Rise Condominium District
R-7(T), Townhouse District
Business Districts
B-1, Local Business District
B-2, General Business District
B-3, Professional Business District
MU, Mixed Use District
Industrial Districts
C/I, Commercial Industrial District
Outdoor Amusement District
C-2, Outdoor Amusement District
Golf Course District
GC, Golf Course District

12-3 RESIDENTIAL DISTRICTS

(a) R-1, Low Density Single Family Residential District:

This district is provided to afford the opportunity for a low density, suburban residential environment consisting of single family residences on large parcels of land.

(b) R-2, Medium Density Single Family Residential District:

This district is provided to afford the opportunity for a medium density single family, urban residential environment consisting of single family residences on lots of a moderate size.

(c) R-3, High Density Single Family Residential District:

This district is provided to afford the opportunity for moderately higher density of single family residences on smaller lots than those allowed in the R-l, Low Density Single Family Residential, and R-2, Medium Density Family Residential, districts.

(d) R-4, High Density Single and Multi-Family Residential District:

The intent of this district is to provide opportunity for high density residential development in specified areas. Within this district it is also considered suitable to include other uses of a type deemed to be compatible with a good, high density living environment by providing for needed community services.

All land heretofore delineated as an R-4 district prior to the enactment of this Ordinance shall remain in R-4 status. However, all existing R-4, High Density Single and Multi-Family Residential Districts shall be developed in accordance with the standards provided within this Ordinance wherein R-6(D), R-6(G), R-7(A), R-7(M), R-7(T) shall be respectively considered for all proposed duplexes, garden/patio homes, apartments, mid-rise condominiums, and townhouses zoning requests.

(e) R-5, Mobile Home Residential District:

The intent of this district is to provide space at appropriate locations consistent with community objectives for the establishment of mobile home parks and subdivisions which provide for the establishment of permanent mobile homes and for the amenities conducive to an adequate living environment. Public or private community water and sewer facilities are required except where lots are equal to Baldwin County

Health Department requirements for private wells and individual septic systems.

(f) R-6(D), Duplex-Two Family District:

This district is provided to afford the opportunity for medium density two family uses in an urban residential environment consisting of duplex residences on lots of a moderate size. R-6(D) shall replace the R-4 Two Family designation.

(g) R-6(G), Garden or Patio Homes District:

This district is provided to afford the opportunity for a considerably higher density of single family residences on smaller lots than those allowed in the R-l, R-2, or R-3, Districts and for their amenities. R-6(G) shall replace the R-4 Garden Home/Patio Home designation.

(h) R-7(A), Apartment District:

The intent of this district is to provide an opportunity for high density multi-family residential development in specified areas and for their amenities. R-7(A) shall replace the R-4 Apartments and Townhouses designation.

(i) R-7(M), Mid-Rise Condominium District:

The intent of this district is to provide an opportunity for high density condominium development in specified areas and for their amenities. All High Rise Condominiums shall be approved by the Planning Commission and the City Council in accordance with Article 38, High Rise Condominiums. R-7(M) shall replace the R-4 Apartments and Townhouses designation.

(j) R-7(T), Townhouse District:

The intent of this district is to provide an opportunity for high density residential development in specified areas and for their amenities. R-7(T) shall replace the R-4 Apartments and Townhouses designation.

12-4 BUSINESS DISTRICTS

(a) B-1, Local Business District:

This district is intended to provide for limited retail, convenience goods and personal service establishments in residential neighborhoods and to encourage the concentration of these uses in one location for each residential neighborhood rather than in scattered sites occupied by individual shops throughout a neighborhood.

(b) B-2, General Business District:

This district is intended to provide opportunity for activities causing noise and heavy traffic, not considered compatible in the more restrictive business district. These uses also serve as a regional, as well as, a local market and require location in proximity to major transportation routes.

(c) B-3, Professional Business District:

This district is established to provide an opportunity for business establishments of a professional nature and is restricted to offices and businesses which provide specific corporate functions or professional services to the general public, but not the sale of goods or services at retail or wholesale.

(d) MU, Mixed-Use District:

A mixed-use district is allowed only within a designated overlay district. A mixed-use district shall be limited to a combination of either B-1, Local Business, B-2, General Business, B-3, Professional Business, and either R-7(A) Apartments, R-7(M) Mid-Rise Condominiums, or R-7(T) Townhouses.

This district is established to provide an opportunity to encourage the concentration of limited retail convenience goods and personal service establishments, business establishments of a professional nature, and high density residential development compatible with a good, high density living environment.

12-5 COMMERCIAL/INDUSTRIAL DISTRICT

(a) C/I, Commercial/Industrial District:

This district is intended to provide locations for heavy commercial and light industrial activities which will not detract from the general character of the community because of hazardous operations, unsightly appearance of buildings and surroundings, objectionable emissions, or other factors that may be detrimental to the community environment.

12-6 OUTDOOR AMUSEMENT DISTRICT

(a) C-2, Outdoor Amusement District:

This district is intended to provide locations for outdoor amusement and recreational activities which serve the needs of the community.

12-7 GOLF COURSE DISTRICT

(a) GC, Golf Course District:

This district is intended to provide locations for golf courses and related activities which may serve the recreational needs of the community.

ARTICLE XIII
DISTRICT REQUIREMENTS

The following limitations and requirements are hereby placed on uses in each district. Such limitations established by this Article are in accordance with the stated purpose and intent of this Ordinance.

13-1 GENERAL

(a) Permitted Uses:

The following are permitted uses in all residential districts, unless otherwise provided herein: customary accessory structures, satellite receiving dishes, gardens, playgrounds, parks, public buildings including schools and libraries**,** agriculture or farming including horticulture, plant nurseries, market gardening, field crops, orchards and home occupations meeting all requirement as prescribed in *Article 31, Home Occupations, Automobile Service Stations, Cemeteries, Bed & Breakfast Establishments, Extended Stay Hotel Facilities*.

(b) Uses Permitted by Special Exception:

Certain public and semi-public uses are essential and desirable for the general convenience and welfare but may not fit compatibly within residential neighborhoods. When it is established by the Board of Zoning Adjustment through site plan review that the location, design, and proposed activities will not adversely affect the public health, safety, morals, and general welfare of the surrounding neighborhood, the following public and semi-public uses may be permitted within a residential district by special exception. Such uses shall thereafter be submitted to the Planning Commission for site plan review and approval:

(1) Public elementary, intermediate, and high schools, church schools, private or parochial elementary or high schools having a curriculum approximately the same as ordinarily given in public elementary and high schools and meeting all standards of the State Board of Education for instruction and site size.

(2) Churches, synagogues, and other places of worship including parish houses, rectories, and other facilities normally incidental to places of worship but excluding funeral homes.

(3) Cultural activities not carried on as a gainful business, including art galleries, non-public libraries, and museums.

(4) Convalescent and nursing homes for the aged.

(5) Recreation facilities, country clubs, community centers, and clubs which would draw a substantial number of users from the immediate neighborhood in which they are located, excluding residential accommodations and any activity carried on as a gainful business other than incidental concessions.

(6) Day care centers, whether public or private, kindergartens, or play schools, upon approval of the State and the Department of Human Resources.

(c) Prohibited Uses:

Any use not permitted or permitted by special exception, except as otherwise determined under *Section 13-3, Compliance with District Requirements*. Commercial and Industrial uses such as garages, repair, storage yards, warehouses, buildings used as correctional institutions, and industrial type operations of any kind.

(d) Unlisted Uses:

In any case where a requested use is not specifically referred to in the Table of Permitted Uses, its status shall be determined by the Planning Commission by reference to the most clearly analogous use or uses that are specifically referred to in the Table of Permitted Uses.

When the status of a use has been so determined by the Planning Commission, such determination shall thereafter have general application to all uses of the same type and shall be added to the Table of Permitted Uses.

13-2 TABLE OF PERMITTED USES—DEFINED

The uses permitted in each of the zoning districts are listed in the *Table of Permitted Uses, Article 35*, in three categories, as follows:

(a) Uses by Right:

Uses in the Table identified by as "by right", are subject to the conditions specified in the Table or otherwise provided herein.

(b) Uses Requiring Planning Commission Approval:

Uses in the Table identified as "Planning Commission Approval" are permitted upon approval by the Planning Commission of the location and the site plan appropriate with regard to transportation, access, water supply, waste disposal, fire, police protection, and other public facilities; as not causing undue traffic congestion or creating a traffic hazard; and in harmony with the orderly and appropriate development of the district in which the development is to occur.

(c) Special Exceptions by the Board of Zoning Adjustment:

Uses in the Table identified by "Special Exceptions by the Board of Zoning Adjustment" are subject to the same approval of location and site plan as uses requiring planning approval. These uses are subject to approval of the Board of Zoning Adjustment in accordance with the provisions provided in *Article 13, Uses Permitted by Special Exception*, and are subject to site plan review by the Planning Commission.

13-3 COMPLIANCE WITH DISTRICT REQUIREMENTS

Any use permitted in any district whether by Right, Planning Approval, Administrative Approval, or as a Special Exception, must comply with the requirements of the district in which it is located, unless a variance from such requirement is specifically requested and granted by the Board of Zoning Adjustment; unless approved as a Planned Unit Development with modifications as required by the Planning Commission provisions of *Article 11-5, Subdivision Exceptions and Exemptions*.

(a) Planning Approval:

Any use requiring planning approval is subject to review and approval of the Planning Commission. Each application to the Planning Commission for approval must be accompanied by a site plan prepared by the applicant or his/her authorized agent. The Planning Commission shall review the application at its next meeting and take into consideration all existing regulations and ordinances of the City of Daphne, as well as, recommendations from the Zoning Administrator, Director of Community Development, the Director of Public Works, the Building Official or his/her designee, the Code Enforcement Officer, the Baldwin County Health Department, public and/or private utility entities and any other such local official. The Planning Commission may either approve the use request as is, approve the request with conditions, or deny the request.

(b) Special Exception:

Any use permitted by special exception is subject to review and approval of the Board of Zoning Adjustment. Each application shall be accompanied by a site plan. The Board of Zoning Adjustment shall consider the recommendations of the Zoning Administrator, Director of Community Development, the Director of Public Works and the Building Official or his/her designee, and make such recommendations a part of the record of any public hearing held on an application for a special exception, prior to making a decision on the application. If the decision of the Board of Zoning Adjustment is not consistent with such recommendations, the minutes of the meeting at which such decision is made shall set forth the particular reasons for deviating from such recommendations.

If the special exception is approved, the site plan shall then be submitted to the Planning Commission for review and consideration.

13-4 REQUIREMENTS FOR LOT AREA, WIDTH, COVERAGE, DENSITY, HEIGHT AND OTHER FACTORS

The following shall apply in districts as outlined, except Planned Unit Developments or Innovative Design for Single Family, and as provided below:

MINIMUM LOT REQUIREMENTS

	Minimum Lot Area Square feet (sq ft)	**Minimum Lot Width at Setback Line** (ft)	**Maximum Lot Coverage** Percent (%)[a]	**Maximum Density**[b] (units/acre)	**Maximum Height**[e] (stories) (ft)
R-I, Low Density Single Family	20,000	100	25	2.0	2.5 stories 35 ft
R-2, Medium Density Residential	15,000	90	25	2.5	2.5 stories 35 ft
R-3, High Density Single Family	12,000	80	30	3.5	2.5 stories 35 ft
R-4, High Density Single Family-- Multi-Family--	5,000 7,500[c]	50 85	38 35	8.0 14.0	3 stories 50 ft
R-5, Mobile Homes	**See**	**Articles**	**25 & 26**	**for**	**Details**
R-6(G) Garden/Patio Homes	5,000	50	38	8	2.5 stories 35 ft
R-6(D), Duplex, **R-7(A), R-7(M), R-7(T)** respectively: Apartments, Mid Rise Condominium, Townhouses	**See**	**Section**	**13-9**	**for**	**Details**
B-1, B-2, B-3 Business Districts and Mixed Use Districts	N/A	N/A	N/A	N/A	4 stories 50 ft
Extra-territorial Planning Jurisdiction	12,000[d]	80	30	3.5	2.5 stories 35 ft

a. Maximum lot coverage percentages do not apply to lots of record smaller than required in the district in which they are located. **b.** Maximum density = total number of dwelling units per gross acre to be developed. **c.** Minimum lot area determined by adding 7,500 square feet for one (1) unit plus two thousand five hundred (2,500) square feet for each additional unit. **d.** Applies to unzoned lots contained within any subdivision located in the extraterritorial planning jurisdiction where the size of the development exceeds ten (10) acres. **e.** Maximum height does not apply to overlay districts (see specific applicable overlay districts. Structures up to seventy-five (75) feet may be permitted on sites zoned B-2 or R-7 upon approval by the Planning Commission. In no case shall such building exceed seventy-five feet in height.

13-5 REQUIREMENTS FOR LOT AREA, WIDTH, COVERAGE AND OTHER FACTORS FOR PUBLIC AND SEMI-PUBLIC BUILDINGS

(a) Definition:

A public building is one which is used exclusively for public purposes by any department or branch of government. A semi-public building is one of an institutional nature and serving a public need, such as a house of worship; hospital; school; library; museum; post office; police, rescue and fire stations; and public utilities and services.

(b) Minimum Lot Area and Lot Width:

None specified; however, the lot shall be large enough to provide the minimum yards as specified herein.

(c) Yard Regulations:

(1) Front Yard: Each lot shall provide a front yard with a minimum depth of forty (40) feet.

(2) Side Yard: Each lot shall have a side yard of a minimum of thirty-five (35) feet on each side.

(3) Rear Yard: Each lot shall have a rear yard with a minimum depth of thirty-five (35) feet.

(d) Maximum Building Height:

No structure shall exceed a height of thirty-five (35) feet, except a church may have a maximum height of fifty (50) feet, provided one (1) foot shall be added to all minimum yard requirements for each additional foot of height in excess of thirty-five (35) feet (does not apply to a church sanctuary).

(e) Maximum Building Coverage:

The maximum land covered by a building shall be no more than fifty (50) percent of the total lot area.

(f) Minimum Landscaping:

A minimum of twenty (20) percent of the lot area shall be maintained as a landscaped common area designed in accordance with the provisions of *Article 19, Landscape Standards and Tree Protection*.

13-6 Minimum Zoning District Setback Requirements

The following setback requirements shall apply in districts as outlined below, except in a Planned Unit Development, the Olde Towne Daphne District, the Village Overlay District, the Eastern Shore Park Overlay District, or the Jubilee Retail Overlay District.

SETBACKS

Zoning District	Front Yard				Rear Yard	Side Yard	Corner Lot Side Yard	
	Arterial & Collector Streets	Local Streets & Service Roads	U.S. Highway 98 [e]	U.S., State or County Roads			Arterial & Collector Streets	Local Streets & Service Roads
R-1	40	40	50	e	40	15	40	25
R-2	35	35	50	e	35	10	35	20
R-3	30	30	50	e	30	10	30	20
R-4SF& R6(G)	25	25	50	e	25	6	30	20
R-4 TF	30	30	50	e	30	a	30	20
R-4 MF	30	30	50	e	30	a	30	20
R-5	See	Article	25	e				
New MF Districts	See Section 13-9, Minimum Requirements for Fixed Dwellings			e				
Innovative Design SF	25	25	50	e	25	6	30	20
ET SF*	30	30	50	e	30	10	30	20
B-1	30	20	50	e	20	b,d	30	25
B-2	30	20	50	e	b,d	b,d	30	25
B-3	30	20	50	e	b,d	b,d	30	25
C/I	50	30	50	e	c, d	c, d	30	20
MU	30	30	n/a	n/a	30	a	30	25

See notes on the following page.

NOTES FOR PREVIOUS TABLE:

(a) Side yards shall be ten (10) feet plus two (2) additional feet for each floor above two stories, but not exceeding twenty (20) feet; when the dwelling unit faces the side yard, the dwelling unit shall be at least twenty-five (25) feet from the side lot line.

(b) None, except it will be five (5) feet where abutting an alley, or where abutting a residential district it shall be at least thirty (30) feet.

(c) Yard shall be twenty (20) feet, except when abutting any part of a Residential or Business district, a setback at least forty (40) feet is required.

(d) Where a public or semi-public use, multi-family residential, or mixed use district abuts any part of a single family residential district, a buffer zone ten (10) feet wide shall be required. Where a B-2 district abuts any part of a single family residential district, a buffer zone fifteen (15) feet wide shall be required. Where an industrial district abuts any part of a business or mixed use district, a buffer zone of twenty (20) feet shall be required. Where an industrial district abuts any part of a residential, a buffer zone of thirty (30) feet shall be required. Each buffer zone shall be designed in compliance with the provisions established in *Article 19, Landscape Standards & Tree Protection*.

(e) Per Act No. 94-572 of the Legislature of Alabama enacted April 21, 1994 as amended, the following setbacks shall apply for any state or county road or highway and measured from the centerline of the R.O.W: principal arterials—Interstate 10 and U.S. Highway 98—require a hundred twenty five (125) foot setback; minor arterials—U.S. Highway 90, State Highway 181 and U.S. 31 require a hundred (100) foot setback; major collectors—County Road 64 requires a seventy five (75) foot setback.

Lot Orientation: On corner lots the front yard shall be considered as parallel to the street upon which the lot has its least dimension. **ET-SF*:** Applies to unzoned lots contained within any subdivision located in the extraterritorial planning jurisdiction where the size of the development exceeds ten (10) acres. **Side yards on buildings between fifty (50) feet and one hundred twenty five (125) feet in height**: all yard setbacks shall be at least fifty (50) feet on each side of building. Additional provisions are outlined in the *Article 38, Residential High Rise Condominium Development District*.

R-1 Low Density Residential

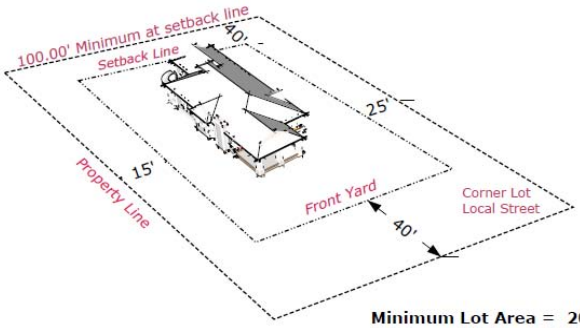

Setback Requirements:

Front Yard -
40' Arterial or collector streets
40' Local Streets & service rds
50' U.S. Highway
Rear Yard - 40'
Side Yard - 15'
Side Yard/Corner Lot-
40' Arterial or collector streets
25' Local streets or service rds

Minimum Lot Area = 20,000 sq. ft.
Minimum Width at Setback Line = 100 ft.

R-2 Medium Density Residential

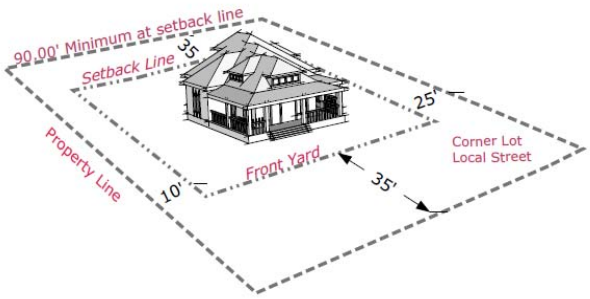

Setback Requirements:

Front Yard -
35' Arterial or collector streets
35' Local Streets & service rds
50' U.S. Highway
Rear Yard - 35'
Side Yard - 10'
Side Yard/Corner Lot-
35' Arterial or collector streets
20' Local streets or service rds

Minimum Lot Area = 15,000 sq. ft.
Minimum Width at Setback Line = 90 ft.

R-3 High Density Single Family Residential

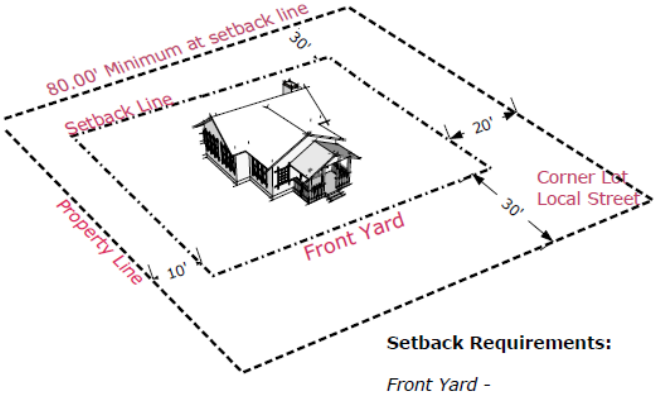

Setback Requirements:

Front Yard -
30' Arterial or collector streets
30' Local Streets & service rds
50' U.S. Highway
Rear Yard - 30'
Side Yard - 10'
Side Yard/Corner Lot-
30' Arterial or collector streets
20' Local streets or service rds

R-4 High Density Single & Multi-Family Residential

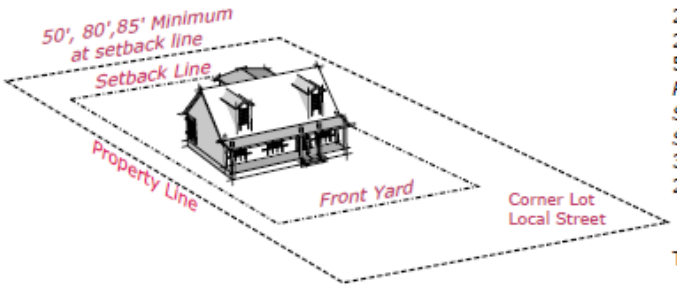

Minimum Lot Area:
Single family 5,000 sq. ft.
Two family 10,00 sq. ft.
Multiple family 7,500 sq. ft.

R 4 Setback Requirements:

Single Family

Front Yard -
25' Arterial or collector streets
25' Local Streets & service rds
50' U.S. Highway
Rear Yard - 25'
Side Yard - 6'
Side Yard/Corner Lot-
30' Arterial or collector streets
20' Local streets or service rds

Two-Family

Front Yard -
30' Arterial or collector streets
30' Local Streets & service rds
50' U.S. Highway
Rear Yard - 25'
Side Yard - *
Side Yard/Corner Lot-
30' Arterial or collector streets
20' Local streets or service rds

Multi-Family

Front Yard -
30' Arterial or collector streets
30' Local Streets & service rds
50' U.S. Highway
Rear Yard - 30'
Side Yard - *
Side Yard/Corner Lot-
30' Arterial or collector streets
20' Local streets or service rds

*10 feet plus 2 additional feet for each floor above 2 stories, not exceeding 20 feet; when dwelling unit faces the side yard, the dwelling unit shall not be less than 25 feet from side lot line.

R-6 Duplex Two Family District

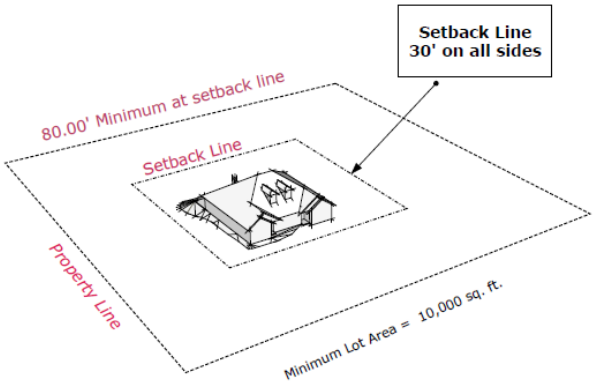

R 6 Requirements:

Minimum Setback Lines - *front/rear/side/corner* - 30'

Maximum Height - 35 feet
Maximum Stories - 2 stories

Minimum Distance Between Bldgs:
facing front-to-back - 100' (25' minimum from back of curb)
facing back-to-back - 100'
side-to-side -1/2 sum of height of both bldgs

R-7 Townhouse District

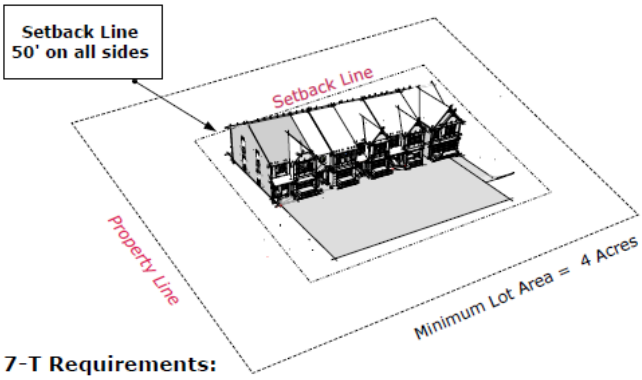

R 7-T Requirements:

Minimum Setback Lines - *front/rear/side/corner* 50'

Maximum Height - 35 feet
Maximum Stories - 2 stories

Minimum Distance Between Bldgs:
facing front-to-back - 100' (25' minimum from back of curb)
facing back-to-back - 100'
side-to-side -1/2 sum of height of both bldgs

Greenbelt Area:
Along Perimeter Roadway - 25' in addition to minimum setback.
Rermaining Project Boundary - 25' located within setbacks.

R-7 Mid-Rise Condominium District

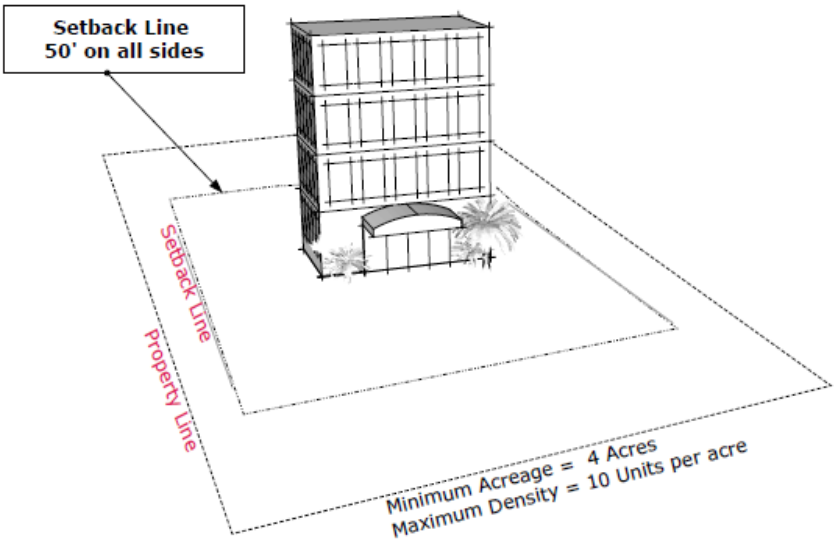

R-7 M District Requirements

Minimum Building Setback Lines:
front/rear/side/corner - 50'

Maximum Height: 50 feet
Maximum Stories: 3 stories

Minimum Distance Between Bldgs:
facing front-to-back 100' (25' minimum from back of curb
facing back-to-back 100'
side-to-side 1/2 the sum of height of both bldgs.

Greenbelt Area:
Along Perimeter Roadway: 25' in addition to minimum setback
Remaining Project Boundary: 25' (may be located within setbacks)

13-7 PERFORMANCE STANDARDS FOR NONRESIDENTIAL DISTRICTS

In all nonresidential districts (with commercial, institutional and/or industrial uses) where facilities are permitted lots shall comply with the following minimum standards:

(a) Lots shall be of sufficient size to be used for the purpose intended, provide adequate parking and loading facilities in addition to space required for conduct of other operation of the business, and otherwise comply with the provisions provided herein.

(b) The minimum lot size for marinas shall be one (1) acre and shall be constructed above mean sea level.

(c) No entrances or exits shall direct traffic into adjacent residential districts.

(d) Noise, air pollutants including dust emissions, and surface runoff shall not exceed background levels by more than ten percent (10%).

(e) Uses in all business districts must comply with all applicable health and safety standards, including sanitary facilities; paved and landscaped parking areas, and all other requirements of this Ordinance, as well as pertinent State and Federal regulations.

(f) Nonpermanent structures such as trailers, sheds, and other such buildings used for business purposes may be permitted in business districts on a temporary basis pending construction of a permanent building. Such structures may be permitted by the Building Official for a three (3) month period, renewable upon written request from the business owner, up to a maximum of one (1) year. Said nonpermanent structure shall be removed immediately upon completion of construction. Delayed removal of the nonpermanent structure may be allowed for no more than thirty (30) calendar days upon review and approval of the Building Official.

(g) All non-residential structures shall be so designed as to present an aesthetically pleasing appearance that is generally compatible with existing buildings in the district, except those less desirable in appearance that have been grandfathered under this Ordinance.

(h) Every effort to make structures aesthetically pleasing shall be made by the developer. Depending upon the location of the proposed facility, as a means to ensure compatibility with existing development or to encourage a higher standard along major corridors, subsequent improvements and changes to building architecture may be required by the Planning Commission.

(i) In all non-residential zoning districts the following are preferred building materials for any wall area facing a public street: brick, textured concrete block,

wood, metal veneers, stucco or Exterior Insulation and Finish Systems (E.I.F.S), concrete, steel, vinyl or stone panels provided they contain some architectural relief and exhibit structural strength.

(j) Metal buildings may be permitted in a C/I zone district only, except where located along County Road 13, Highway 98, Highway 90, Highway 181, Olde Towne Daphne, the Village Overlay District, Eastern Shore Overlay District and Jubilee Retail Overlay District.

13-8 FIXED DWELLINGS

(a) R-6(D), DUPLEX-TWO FAMILY DISTRICT PROVISIONS:

(1) Duplex-Two Family Definition:

A building containing two single-family dwelling units totally separated from each other by an unpierced wall extending from basement to roof, and not exceeding two and one-half (2 ½) stories or thirty-five (35) feet in height. (See also Definition of Building Height).

(2) Regulation for Buildings and Yards:

The following list provides the minimum yard setbacks, minimum lot requirements, and maximum allowable building height for R-6(D), Duplex Districts.

R-6(D) DUPLEX-TWO FAMILY MINIMUM REQUIREMENTS

Minimum Acreage	0.5 acre
Minimum Lot Width	80 feet
Maximum Density	8 dwelling units/acre or 4 duplexes/acre
Maximum Lot Coverage	
Impervious surfaces	
Buildings/structure	30%
Maximum Height	35 feet
Stories	2 stories
Minimum Building Setback Lines	
Front	30 feet
Rear	30 feet
Side	15 feet
Interior corner	15 feet
Street side corner	30 feet
Minimum Parking	2 spaces per dwelling unit

Greenbelt Area for Subdivision Development:

Along Perimeter Roadway	30 feet wide in addition to minimum building setback.
Remaining Project Boundary	25 feet wide, maybe within minimum building setbacks.

(b) R-7(A), APARTMENT DISTRICT:

(1) Multiple Family Garden Apartments Definition:

One or more two or three story, multi-family structures containing 8 to 20 (eight to twenty) dwelling units and including related off-street parking, open space and recreation facilities, and not exceeding fifty (50) feet in height. Structures shall not exceed two hundred (200) feet in length. Access may be from a common hall or individual entrance. Dwelling units may be located back to back, adjacent, and on top of one another.

(2) Regulation for Buildings and Yards:

See *Article 13, Minimum Requirements for Fixed Dwellings*, for the minimum yard setbacks, minimum lot requirements, and maximum allowable building height for R-7(A), Apartment Districts.

(c) R-7(T), TOWNHOUSE DISTRICT:

(1) Town House – Single Family Definition:

A one family dwelling with ground floor outside access, attached to three or no more than five, one family dwellings by common vertical fire resistant walls without openings, and not exceeding two and one half (2 ½) stories or thirty-five (35) feet in height. (See also Definition of Building Height).

(2) Regulation for Buildings and Yards:

See *Article 13, Minimum Requirements for Fixed Dwellings*, for the minimum yard setbacks, minimum lot requirements, and maximum allowable building height for R-7(T), Townhouse District.

(d) R-7(M), MID-RISE CONDOMINIUM DISTRICT:

(1) Condominium, Mid-Rise Definition:

A building, if containing three to seven stories in which dwelling units, offices, or floor area owned by all owners or a proportional, undivided basis. Underground parking facilities are not counted in the height; however, ground level parking beneath the building shall be counted as a story. Structures of more than fifty (50) feet in height may be permitted subject to the approval of the City Council with the Planning Commission's recommendation; however, in no event shall a mid-rise condominium be approved for a height greater than seventy five (75) feet. *See Article 38 for High Rise Condominium requirements*.

(2) Regulation for Buildings and Yards:

See *Article 13, Minimum Requirements for Fixed Dwellings*, for the minimum yard setbacks, minimum lot requirements, and maximum allowable building height for R-7(M), Mid-Rise Condominium District.

13-9 MINIMUM REQUIREMENTS FOR FIXED DWELLINGS

The following fixed dwelling minimum requirements shall apply in districts as outlined below, except in overlay districts.

Fixed Dwelling Minimum Requirements	**R-7(A) Apartments**	**R-7 (T) Townhouse**	**R-7 (M) Mid Rise Condo**
Minimum Acreage	4 ac	4 ac	4 ac
Minimum Lot Width	None	None	None
Maximum Density	10 units/acre	10 units/acre	10 units/acre
Maximum Height	50 feet or 3 stories	35 feet or 2 ½ stories	50 feet or 4 stories
Minimum Building Setback Lines Front/rear/side/corner	50 feet	50 feet	50 feet
Minimum Distance between Buildings -facing front to back	100' (25' minimum from back of curb)	100' (25' minimum from back of curb)	100' (25' minimum from back of curb)
-facing back to back	100'	100'	100'
-side to side	½ the sum of the height of both building	½ the sum of the height of both building	½ the sum of the height of both building
Maximum Lot Coverage Impervious surfaces **Buildings/structures**	30%	30%	30%
Greenbelt Area Width Along Perimeter Roadway In addition to minimum setback	25 ft	25 ft	25 ft
Width on Remaining Project Boundary(s) Greenbelt may be located within setbacks	25 ft	25 ft	25 ft
Minimum Landscaping See Article 19			
Minimum Parking Spaces per dwelling unit	2	2	2
Additional Provisions See Article 28			

13-10 REQUIREMENTS FOR LOT AREA, WIDTH, COVERAGE AND OTHER FACTORS FOR OUTDOOR AMUSEMENT USES

(a) Definition:

Public, private, or semi-private property which is used exclusively for recreational and amusement purposes, generally these activities are not enclosed within a building.

(b) Permitted Uses:

Outdoor Amusement facilities permitted in the City of Daphne are listed in *Article 35, Table of Permitted Uses*.

(c) Minimum Lot Area and Lot Width:

None specified, however, the lot shall be large enough to provide the minimum yards as specified herein.

(d) Setback Regulations:

(1) Front: Each lot shall provide a front yard with a minimum depth of forty (40) feet.

(2) Side: Each lot shall have a side yard of a minimum of forty (40) feet on each side.

(3) Interior Side Exception: The interior side setback may be reduced to fifteen (15) feet where abutting property zoned B-1, Local Business, B-2, General Business, C/I, Commercial/Industrial, or where abutting a public or semi-public use.

(4) Rear: Each lot shall have a rear yard with a minimum depth of thirty-five (35) feet.

(5) Rear Yard Exception: The rear setback may be reduced to ten (10) feet where abutting property zoned B-1, Local Business, B-2, General Business, or C/I, Commercial/Industrial, or where abutting a public or semi-public use.

(e) Maximum Building Height: Fifty (50) feet.

(f) Maximum Building Coverage:

The maximum land covered by a building shall be no more than twenty-five percent (25%) of the total lot area.

(g) Minimum Landscaping:

A minimum of twenty (20) percent of the lot area shall be maintained as a landscaped common area designed in accordance with the provisions of *Article 19, Landscape Standards and Tree Provisions.*

(h) Performance Standards:

(1) Amusement and recreation services must be so arranged that noise, vibration, lights, and all other possible disturbing aspects are enclosed, screened or otherwise controlled so that operation of the establishment will not unduly interfere with the use and enjoyment of properties in the surrounding area.

(2) Unless otherwise noted herein, any permanent or temporary building or structure shall be one hundred (100) feet from any property line.

(i) Parking Requirements:

All parking requirements shall be based upon the most current industry standard for each particular outdoor amusement use, modifications to said parking standard may be considered as deemed appropriate by the Planning Commission.

13-11 REQUIREMENTS FOR LOT AREA, WIDTH, COVERAGE AND OTHER FACTORS FOR GOLF COURSE USES

(a) Definitions:

1) *Golf course:* A tract of land for playing golf, improved with tees, greens, fairways, hazards, and which may include clubhouses, shelters, putting greens, and or driving ranges. Included would be executive or par three golf courses. Specifically excluded would be independent driving ranges and any miniature golf course.

2) *Green space*: An area of land covered in grass or other vegetation or a natural water feature. Uses in green space may include stormwater areas, wooded slopes, graded and re-vegetated slopes, required yards on both residential and non-residential lots, landscaped areas, and other land covered in vegetation.

(b) Permitted Uses:

Any green space and/or golf course as defined above shall be permitted in the GC zone. Additional information on permitted uses is listed in *Article 35, Table of Permitted Uses*.

(c) Minimum Lot Area and Lot Width:

None specified, however, the lot shall be large enough to provide the minimum yards as specified herein.

(d) Building Setback Regulations:

(1) Front: Each lot shall provide a front yard with a minimum depth of forty (40) feet.

(2) Side: Each lot shall have a side yard of a minimum of forty (40) feet on each side.

(3) Interior Side Exception: The interior side setback may be reduced to fifteen (15) feet where abutting property zoned B-1, Local Business, B-2, General Business, C/I Commercial/Industrial, or where abutting a public or semi-public use.

(4) Rear: Each lot shall have a rear yard with a minimum depth of thirty-five (35) feet.

(5) Rear Yard Exception: The rear setback may be reduced to ten (10) feet where abutting property zoned B-1, Local Business, B-2, General Business, or C/I Commercial/Industrial, or where abutting a public or semi-public use.

(e) Maximum Building Height: fifty (50) feet.

(f) Maximum Building Coverage:

The maximum land covered by a building shall be no more than twenty-five percent (25%) of the total lot area.

(g) Minimum Landscaping:

A minimum of twenty (20) percent of the lot area shall be maintained as a landscaped common area designed in accordance with the provisions of *Article 19, Landscape Standards and Tree Protection*.

(h) Performance Standards:

(1) Golf courses must be so arranged that noise, vibration, lights, and all other possible disturbing aspects are enclosed, screened or otherwise controlled so that operation of the establishment will not unduly interfere with the use and enjoyment of properties in the surrounding area.

(2) Unless otherwise noted herein, any permanent or temporary building or structure shall be one hundred (100) feet from any property line.

(i) Parking Requirements:

All parking requirements shall be based upon the most current industry standard for golf courses, modifications to said parking standard may be considered as deemed appropriate by the Planning Commission.

ARTICLE XIV
THE OLDE TOWNE DAPHNE DISTRICT

14-1 PURPOSE

The intent of this Article is to provide for the creation of the district in order to establish minimum standards and provisions for residential, business, or commercial development in the areas outlined the map provided herein and to achieve a healthy, beautiful, and safe community by the following means:

- Aesthetics:

  Improve the appearance of all areas through the incorporation of innovative landscaping and open space into development in ways that harmonize and enhance the natural beauty of the environment.

- Land Values:

  Maintain and increase the value of land by incorporating innovative designs and criteria into development, thus becoming itself a valuable capital asset.

- Human Values:

  Provide direct and important physical and psychological benefits to human beings through the use of landscaping and tree preservation as a buffer zone between residential and business development to reduce noise and glare, and to break up the monotony and soften the harsher aspects of urban development.

- Improved Design:

  Promote innovative and cost conscious approach to the design and construction of the District.

- Improved Administration and Enforcement:

  Establish procedures and standards for the administration and enforcement of this Article.

14-2 USES PERMITTED

The following zoning districts provided herein established and most specifically defined in *Article 12, Establishment of Districts*: B-1, Local Business, B-2, General Business, B-3, Professional Business, R-4, Single Family and Multi-Family Residential, and MU, Mixed Use. *Article 35, the Table of Permitted Uses and Conditions*, outlines the restrictions for each district. (See also *Article 12, Establishment of Districts*). The Planning Commission shall no longer consider zoning or rezoning amendments for B-2, General Business or R-4 zoning districts. All existing B-2, General Business and R-4, High Density Single and Multi-Family Residential Districts shall be developed in accordance with the standards provided herein. For any new request, the following districts shall be considered

in lieu of R-4: R-6(G) for all garden/patio homes developments; and, R-6(D) for duplexes.

14-3 SPECIAL PROVISIONS

The following shall apply:

(a) The provisions of this Article shall be required for all residential projects involving the construction of two (2) or more dwelling units including apartments, town homes, condominiums, planned unit developments, subdivisions, business, commercial, industrial, and/or institutional structures; all existing structures which increase the gross floor area by thirty (30) percent or more, except a single family residence; construction of a park, public way, open space, public building or structure; construction of a public utility whether publicly or privately owned; and other uses as required by the Planning Commission.

(b) A site plan review for minor expansions of commercial or institutional uses, renovations or changes in use shall be subject to administrative review and approval by the Director of Community Development to determine compliance with the provisions of this Ordinance.

(c) Whenever a major development is proposed the developer should informally consult with the Department of Community Development prior to site plan application to ensure compliance with the required regulations. No fee shall be charged for the review and no formal application shall be required.

(d) Any development which is to be constructed in phases or units shall require a master plan of the site which shall be submitted to the Planning Commission for approval prior to submitting a site plan application. The subdivider shall submit to the Department of Community Development, a written request for review and approval by the Planning Commission and a copy of said master plan. The master plan shall be of sufficient detail to show the proposed street and lot layout, drainage, utilities, detention, common, recreational, landscaped areas and maximum density (gross and net).

(e) Size of properties reserved or laid out for business, or commercial purposes shall be adequate to provide for the off-street service and parking facilities required by the type of use and development contemplated.

(f) A site plan review shall be accomplished by the recommendation of the Director of Community Development and approval of the Planning Commission to assure compliance with the provisions of the Land Use and Development Ordinance in conformity with its purpose as stated in *Article I, Purpose, Repeals, Enactment and Short Title*, as well as, applicable Building and Fire Codes, latest edition.

(1) Site plan approval shall become void one (1) year from the date of Planning Commission approval if no site disturbance permit has been acquired for the project. The site disturbance permit and site plan shall both become void one (1) year from the issuance of the site disturbance permit if no substantial building or construction activity has occurred.

(2) Prior to expiration, a one (1) year extension of time may be granted for the approved site plan and the site disturbance permit by the Director of Community Development, upon written request of the applicant stating good reason.

(3) If no construction activity has occurred after the expiration of the extended time, an additional one (1) year extension of time may be considered by the Planning Commission. At no time shall any site plan and related site disturbance permit be granted an extension beyond this time. The site plan and site disturbance permit shall automatically be deemed null and void.

(g) After site plan approval and before the issuance of a site disturbance permit, a pre-construction conference shall be held between the developer, contractors, the Departments of Community Development, Public Works, Building Inspections; Riviera Utilities, Daphne Utilities; any other applicable public or private utility company, local, state, and/or federal agency. At the pre-construction conference, involved parties will discuss issues related to permitting, construction safety, general expectations during construction, final inspection protocol, etc.

(h) When all required improvements are installed in accordance with the site plans and specifications approved by the Planning Commission, the developer or owner shall request a final inspection by the design engineer and the registered landscape architect. Both shall forward compliance letters to the Director of Community Development. Upon receipt thereof the Director or his/her duly authorized representative shall inspect the site to determine if the required improvements are satisfactorily installed prior to signing the certificate of occupancy or final plat.

14-4 SITE PLAN APPLICATION

Prior to making any improvements, the developer/owner shall submit to the Planning Commission a site plan of the project for review in accordance with the following procedure. These items shall be received in the Department of Community Development not less than thirty (30) days prior to a regularly scheduled meeting of the Planning Commission at which meeting the site plan is to be formally submitted for review.

(a) Developer's Responsibility-the developer shall submit to the Department of Community Development:

(1) Completed application on prescribed forms signed by the property owner or authorized agent; an agent authorization letter—if applicable; a copy of the recorded warranty deed of the subject property (as proof of ownership); the Owner's Indemnification and Maintenance Agreement Form for Commercial Developments; drainage calculations; Certification of Engineering Design form; applicable State and/or Federal permit applications; in accordance with specifications provided in the Site Plan Supplemental Documentation List in the Appendix; the site plan; documentation of all applicable utility companies' service availability and willingness to provide services; the filing fee as specifically enumerated in *Article 34, Schedule of Fees.*

(2) The developer shall submit a site plan and utility sheets to each utility company for review. Paper and electronic copies shall be provided to the Department of Public Works, Bureau of Fire Prevention, Riviera Utilities, Daphne Utilities and the Building Department. The subdivider shall submit a site plan and applicable documents as may be necessary to any and all applicable utility companies, local, state and/or federal agencies for review. Sign details shall be submitted to the Code Enforcement Officer for review.

(a) Site Plan Content:

The site plan shall contain all information as reflected on the current Site Plan Supplemental Documentation List and the Site Plan Review checklist as provided in the Appendix. Either may be modified at the discretion of the Director of Community Development when applicable. However, any modifications to either the checklist or supplemental list shall be requested of the applicant and approved by the Director of Community Development during or as a result of a pre-application conference. Incomplete submissions shall not be accepted by the Department of Community Development.

Site plans shall be designed and certified by a professional design engineer. Landscape plans shall be designed and certified by a registered landscape architect. Site plans shall include the following sheets: boundary survey, existing conditions, tree survey, site plan, geometric plan, utility plan, water and sewer plan, grading and drainage plan, construction best management practices plan, applicable construction details and notes as may be applicable, an overall master plan, if applicable, landscape plan and irrigation plan, building elevations, floor plans, and sign details. Site plans shall be designed to meet all applicable provisions of this Ordinance.

(b) Posting Notice of Site Plan Review:

Applicant shall be responsible for posting a sign providing public notice of site plan review. Failure to post said sign fifteen (15) days prior to Planning Commission review, shall cause the application to be withdrawn from the meeting agenda. Said sign shall not be an advertisement sign for the proposed project, but an advertisement of the Planning Commission meeting dates and times in accordance with the standards established for such provided in the Supplemental Information.

14-5 WAIVER

The Director of Community Development may waive certain requirements contained in this Article if, in his/her opinion, the requirements are not essential to a proper decision on the project; or, he/she may supplement the list with other requirements deemed necessary to clarify the nature of the proposed development.

14-6 BOND REQUIREMENT FOR OFF-SITE IMPACTS

(a) Whenever a person, firm, corporation, developer or other entity proposes to develop a commercial, public, semi-public or multi-family, or mixed use project that, in the opinion of the Director of Community Development constitutes a land disturbing activity which may pose a risk of drainage and/or siltation damage outside the boundaries of the project, such person, firm, corporation, developer or other entity conducting the land disturbing activity shall be required to submit a non-cancelable performance bond in the name of the permittee, a letter of credit or cashier's check, to the City prior to the issuance of a site disturbance permit.

(b) At the time of the site plan approval, the bond shall become effective and shall extend for a period of at least two (2) years following the issuance of the certificate of occupancy by the City. The bond shall be in the amount of twenty percent (20%) of the total cost for the performance of all site work. Said bond shall cover drainage, erosion and siltation damage, if any.

(c) The Director of Community Development or other administrative official as designated by the City Council shall determine the prescribed bond, as well as, the adequacy and the security thereon.

14-7 FEES & APPLICATION WITHDRAWAL PROCEDURES

An application for site plan review, site disturbance permit and extension requests shall be accompanied by the appropriate fee as specifically enumerated in *Article 34, the Schedule of Fees*. If, for any reason, an item scheduled for initial presentation before the Planning Commission is requested to be tabled or withdrawn within seven (7) calendar days of submission to the Department of Community Development, then the application fee and notification fee will be credited toward re-submittal of the application; however, beyond the seven (7) calendar day period, fees shall not be refunded nor credited toward subsequent submittals. The request to withdraw or table the item shall be submitted in writing to the Department of Community Development prior to the scheduled hearing date.

14-8 ISSUANCE OF SITE DISTURBANCE PERMIT

Each person, firm, corporation, utility, entity or agent thereof preparing to engage in any site preparation and/or construction activities shall acquire a site disturbance permit from the Department of Community Development prior to commencement of such activities as established pursuant to the provisions of this Article and no such activity shall commence prior to the approval of a site plan by the Planning Commission if required by Section 14-3(a) or administrative review by the Director of Community Development if required by Section 14-3(b). Fees for said permit and permit extension requests are enumerated in *Article 34, Schedule of Fees.*

14-9 ISSUANCE OF BUILDING PERMIT

Upon approval of the site plan either as submitted or with changes and/or special conditions required by the Planning Commission, the Building Official may issue a building permit for a portion or all of the proposed development provided that the application is in compliance with all applicable city, county, state and federal requirements.

14-10 PARKING REQUIREMENTS

Any business use located within the Olde Towne Daphne District with a lot frontage of fifty (50) feet shall require a minimum of four (4) parking spaces, with a lot frontage of twenty-five feet shall require a minimum of two (2) parking spaces, and shall also comply with the minimum design and improvements standards as otherwise outlined in this Ordinance and ADA requirements.

Off-street parking for multi-use buildings or mixed use developments shall be located in the rear of the building(s) adjacent to the street.

For any use for which the above referenced parking requirement cannot be met due to the unique conditions of a particular parcel of property as documented on the site plan, off-street parking spaces of the public type may be considered toward the requirements necessary to comply with the Article upon determination of the Director of Community Development and approval of the Planning Commission.

14-11 SIGNAGE

The maximum allowable square footage established in each zoning designation and/or overlay district shall apply as provided in each district. Said allowable area shall not be exceeded. In the event that channel letters, as defined in *Article 8, Definitions*, are proposed, then the maximum allowable square footage shall be calculated at a rate of eighty percent (80%) in lieu of the standard rate of one hundred percent (100%).

(a) Nonconformance:

Any sign in existence on the date of the adoption of this Ordinance that is not in conformance shall be considered a nonconforming sign and shall be permitted to continue to exist, subject to the conditions and prohibitions set forth in the provisions of *Article 33, Sign Provisions*.

(b) Single-Use Building (A commercial building with one commercial tenant):

Signs indicating the name of a business or retail use permitted in this District with a single-use building shall have one (1) sign not to exceed fifteen (15) square feet in area per face, five (5) feet in height, of the ground sign or pylon type, and have two (2) faces.

Each establishment of a business or retail use permitted in this District with a single-use building may acquire an additional permit for a wall-mounted sign of a size not to exceed ten percent (10%) of the surface frontal area of its building or portion of the building. Signs mounted on mansards, marquees, windows, and awnings are deemed to be wall signs.

(c) Multi-Use Building (A commercial building which houses more than one commercial tenant:

Signs indicating the name of a business or retail use permitted in this District with a multi-use building shall have one (1) sign not to exceed thirty-two (32) square feet in area per face, ten (10) feet in height, of the ground sign or pylon type, and have two (2) faces.

Each establishment of a business or retail use permitted in this District within a multi-use building may acquire an additional permit for a wall-mounted sign of a size not to exceed ten percent (10%) of the surface frontal area of its building or portion of building. Signs mounted on mansards, marquees, windows, and awnings are deemed to be wall signs.

(d) Fees:

Signs permitted under this Article shall require a permit as more specifically enumerated in *Article 33, Sign Provisions*. Fees for each permitted sign are specifically enumerated in *Article 34, Schedule of Fees*.

14-12 SIDEWALKS

A sidewalk of a minimum six (6) feet in width shall be required to be located adjacent to the front property line and in the interior of multi-use developments.

14-13 LANDSCAPE STANDARDS

(a) General Requirements:

The developer of any use in this District shall suitably landscape at least five percent (5%) of the subject property and also comply with the requirements of *Article 19, Landscape and Tree Protection*.

If the landscape design is determined to be compatible with the character of the District, an innovative landscape design, to include planters and/or hanging plants, as well as, a “natural cluster of trees” may be approved if recommended by the Director of Community Development and given approval by the Planning Commission.

More stringent design and landscape standards may be required if it is determined that the design would be more compatible with the development and more beneficial to the aesthetics of the Olde Towne Daphne district.

(b) Off-Street Parking Landscape Requirements:

The design and appearance of parking areas are intended to be compatible with the character of the community. Toward this objective, the following landscaping standards shall be observed in the construction of off-street parking areas:

(1) Landscaped areas and perimeter areas shall be so graded as to receive a reasonable portion of the rainfall from the surrounding pavement. Protective curbing around landscaped areas will leave openings for the flow of water onto unpaved areas.

(2) Landscaped areas shall be protected from vehicular encroachment by the use of curbing or wheel stops.

(3) The owner, tenant, occupant and/or agent, if any, shall be jointly and severally responsible for watering and maintaining all landscaping in a healthy, neat and orderly condition, replacing it when necessary, and keeping it free of refuse and debris.

(4) Adjacent residential property owners may jointly agree on the establishment of a common landscaped or fenced area between their properties which meets the requirements of this Article.

(c) Buffer Zone Requirements:

Where a business district abuts any part of a residential district, a buffer zone ten (10) feet in width shall be required. The buffer shall run the entire length of the abutting lot line(s). Under no circumstances shall this buffer impair vehicular flow and shall be part of the yard requirements. Said protection buffer shall be maintained in such a manner to accomplish its purpose continuously.

This District shall comply with the following minimum standards and said buffer zone shall be constructed of at least one of the following three (3) designs or a combination thereof as determined by the Director of Community Development and approved by the Planning Commission:

(1) Wall or Fence.

If a wall or fence of solid appearance is provided as a protection buffer, it shall be at least six (6) feet in height and of a construction and a design approved by the Planning Commission.

(2) Screen Planting Strip.

A staggered double row of Evergreen plantings at least ten (10) feet in width which will grow to at least ten (10) feet in height and spaced in a manner in which after three (3) years it will provide an impervious visual barrier.

(3) Natural Forest.

A natural, undisturbed forest which provides a nearly impervious visual barrier due to the dense nature of the plants and/or trees. If this option is chosen, the width of the buffer zone shall be ten (10) feet in width and shall be included on the landscape plan.

The Director of Community Development shall determine whether the barrier is satisfactory via site inspection prior to approval.

14-14 SUPERVISION

The landscape architect shall be responsible for the supervision of all plantings. After completion, the landscape architect shall certify in writing to the City of Daphne that the submitted, approved landscape plan has been implemented and complies with the requirements of this Article.

14-15 CERTIFICATE OF OCCUPANCY

A certificate of occupancy shall not be issued until the submitted, approved landscape plan has been implemented or cash or cashier's check has been submitted in an amount equal to one hundred and fifty percent (150%) of the actual landscape cost which shall be certified by a professional landscape architect with a signed/sealed cost estimate for incomplete work.

14-16 PENALTIES

The Code Enforcement Officer of the City of Daphne shall serve the owner of said property, each person, firm or corporation engaged in the activities regulated hereunder in which the activities are being conducted in violation of any provision of this Article with a Summons and Complaint citation.

The person(s) shall be fined upon conviction, not less than twenty-five dollars ($25.00) nor more than five hundred dollars ($500.00) and costs of the court for each offense.

14-17 SETBACKS

MINIMUM DISTRICT REQUIREMENTS[d]				
Zoning Districts	**Front Yard**	**Rear Yard**	**Side Yard**	**Corner Lot Side Yard**
R-4[c] Single Family R-6(D or G) Duplex or Garden or Patio Home	15	20	6	25
R-4[c] Multi-Family	15	20	a	25
B-1 Local Business	10	b	b	25
B-2 General Business	10	b	b	25
B-3 Professional Business	10	b	b	25
MU Mixed Use	15	e	b	25

(a) When dwelling unit faces side yard, the dwelling unit shall not be less than twenty-five (25) feet from the side lot line.

(b) None. If there is a rear alley, the setback shall be twenty-five (25) feet. When abutting a residential district it shall be not less than ten (10) feet. (See *Buffer Requirements, Section 14-13, Landscape Standards*).

(c) The Planning Commission shall no longer consider zoning or rezoning amendments to an R-4 zoning district. All existing R-4, High Density Single and Multi-Family Residential Districts shall be developed in accordance with the standards provided herein. For all new requests, the following districts shall be considered in lieu of R-4: R-6(G) for all garden/patio homes developments; R-6(D) for duplexes; R-7(A) for apartments; and R-7(T) for townhouses and R-7(M) for mid-rise condominiums.

(d) Minimum district requirements for any zoning district not specifically listed in this table shall meet the minimum standards as established in Requirement for lot area, width and setbacks in *Section 13-4, Requirements For Lot Area, Width, Coverage, Density, Height and Other Factors and 13-6, Minimum Zoning District Setback Requirements,* herein.

(e) None. If there is an alley, the setback shall be twenty-five (25) feet. When abutting a residential district it shall be not less than fifteen (15) feet. (See *Buffer Requirements, Section 14-13, Landscape Standards*).

14-18 MAXIMUM BUILDING HEIGHT

Except as otherwise provided herein, no structure shall exceed thirty-five (35) feet in height in any R-4, Single Family and Multi-Family Residential, district or more than 50 (fifty) feet in height in any Business or Mixed Use District. Structures of more than fifty (50) feet shall not be permitted. (See Definition of Building Height in *Article 8, Definition of Terms*).

14-19 DRAINAGE

Any use in this District shall comply with *Article 18, Drainage and Storm Water Management Facilities and Erosion/Sediment Control*.

14-20 DISTRICT MAP

The Olde Towne District Map, Exhibit B, is hereby adopted and as a part of this Ordinance. (See *Appendix I, Table of Contents*).

.

ARTICLE XV
PROCEDURES FOR SITE PLAN REVIEW

15-1 USE AND APPLICABILITY

(a) The provisions of this Article shall be required for all residential developments involving the construction of two (2) or more dwelling units including apartments, town homes, condominiums, business, commercial, industrial, and/or institutional structures; all existing structures which increase the gross floor area by thirty percent (30%) or more, except a single family residence; construction of a park, public way, open space, public building or structure; construction of a public utility whether publicly or privately owned; and other uses as required by the Planning Commission.

(b) A site plan review for minor expansions of commercial or institutional uses, renovations or changes in use shall be subject to administrative review and approval by the Director of Community Development to determine compliance with the provisions of this Ordinance.

15-2 PRE-APPLICATION & PRE-CONSTRUCTION CONFERENCES

(a) Pre-Application Conference:

Whenever a major development, one which is five (5) acres or more or as deemed appropriate by the Director of Community Development, is proposed within the corporate limits, the developer should informally consult with the Department of Community Development prior to site plan application to ensure compliance with the required regulations. No fee shall be charged for the review and no formal application shall be required.

(b) Pre-Construction Conference:

After site plan approval and before the issuance of a site disturbance permit, a pre-construction conference shall be held between the developer, contractors, the representatives from the Departments of Community Development, Public Works, Building Inspections; Riviera Utilities, Daphne Utilities, any other applicable public or private utility company, local, state, and/or federal agency. At the pre-construction conference, participants will discuss issues related to permitting, construction safety, general expectations during construction, final inspection protocol, etc.

15-3 MASTER PLAN SUBMITTAL

Any development which is to be constructed in phases or units shall require a master plan of the site which shall be submitted to the Planning Commission for approval prior to submitting a site plan application. The subdivider shall submit to the Department of Community Development, a written request for review and approval by the Planning Commission and a copy of said master plan. The master plan shall be of sufficient detail to show the proposed street and lot layout, drainage, utilities, detention, common, recreational, landscaped areas and maximum density (gross and net).

15-4 SPECIAL PROVISIONS

The following shall apply:

(a) Water, sewer, gas, electric power, telephone, cable television, and other utility lines shall be installed underground by the developer and/or owner in all new residential, commercial, and industrial developments, expansions, and/or renovations of existing said developments shall be connected to a central distribution system, unless for good reasons other than cost, the Planning Commission approves a modification or waiver of this requirement in part or in whole, or if a special condition requires otherwise.

(b) Size of properties reserved or laid out for business, commercial, or industrial purposes shall be adequate to provide for the off-street service and parking facilities required by the type of use and development contemplated.

(c) A site plan review shall be accomplished by the recommendation of the Director of Community Development and approval of the Planning Commission to assure compliance with the provisions of the Land Use and Development Ordinance in conformity with its purpose as stated in *Article I, Purpose, Repeals, Enactment and Short Title,* as well as, applicable Building and Fire Codes, latest edition.

(d) Planning Commission approval shall be the first step in the construction permitting process. After approval, the owner or developer shall provide to the Department of Community Development, the appropriate signed application form, a cost estimate for site work certified by the design engineer, the fee for a site disturbance permit as enumerated in *Article 34, Schedule of Fees,* applicable state and/or federal permits, sand proof of the contractor's Daphne Business license.

(1) Site plan approval shall become void one (1) year from the date of Planning Commission approval if no site disturbance permit has been acquired for the project. The site disturbance permit and site plan shall both become void one (1) year from the issuance of the site disturbance permit if no substantial building or construction

activity has occurred.

(2) Prior to expiration, a one (1) year extension of time may be granted for the approved site plan and the site disturbance permit by the Director of Community Development, upon written request of the applicant stating good reason.

(3) If no construction activity has occurred after the expiration of the extended time, an additional one (1) year extension of time may be considered by the Planning Commission. At no time shall any site plan and related site disturbance permit be granted an extension beyond this time. The site plan and site disturbance permit shall automatically be deemed null and void.

(e) When all required improvements are installed in accordance with the site plans and specifications approved by the Planning Commission, the developer or owner shall request a final inspection by the design engineer and the registered landscape architect. Both shall forward compliance letters to the Director of Community Development. Upon receipt thereof the Director or his/her duly authorized representative shall inspect the site to determine if the required improvements are satisfactorily installed prior to signing the certificate of occupancy or final plat.

15-5 SITE PLAN APPLICATION

Prior to making any improvements, the developer/owner shall submit to the Planning Commission a site plan of the project for review in accordance with the following procedure. These items shall be received in the Department of Community Development not less than thirty (30) calendar days prior to a regularly scheduled meeting of the Planning Commission at which meeting the site plan is to be formally submitted for review.

(a) Developer's Responsibility-the developer shall submit to the Department of Community Development:

(1) Completed application on prescribed forms signed by the property owner or authorized agent; an agent authorization letter—if applicable; a copy of the recorded warranty deed of the subject property (as proof of ownership); the Owner's Indemnification and Maintenance Agreement Form for Commercial Developments; drainage calculations; Certification of Engineering Design form; applicable State and/or Federal permit applications; in accordance with specifications provided in the Site Plan Supplemental Documentation List in the Appendix; the site plan; documentation of all applicable utility companies' service availability and willingness to provide services; the filing fee as specifically enumerated in *Article 34, Schedule of Fees.*

(2) The developer shall submit a site plan and utility sheets to each utility company for review. Paper and electronic copies shall be provided to the Department of Public Works, Bureau of Fire Prevention, Riviera Utilities, Daphne Utilities and the Building Department. The subdivider shall submit a site plan and applicable documents as may be necessary to any and all applicable utility companies, local, state and/or federal agencies for review. Sign details shall be submitted to the Code Enforcement Officer for review.

(a) Site Plan Content

The site plan shall contain all information as reflected on the current Site Plan Supplemental Documentation List and the Site Plan Review checklist as provided in the Appendix. Either may be modified at the discretion of the Director of Community Development when applicable. However, any modifications to either the checklist or supplemental list shall be requested of the applicant and approved by the Director of Community Development during or as a result of a pre-application conference. Incomplete submissions shall not be accepted by the Department of Community Development.

Site plans shall be designed and certified by a professional design engineer. Landscape plans shall be designed and certified by a registered landscape architect. Site plans shall include the following sheets: boundary survey, existing conditions, tree survey, site plan, geometric plan, utility plan, water and sewer plan, grading and drainage plan, sedimentation and erosion control plan, best management practices plan, applicable construction details and notes as may be applicable, an overall master plan, if applicable, landscape plan and irrigation plan, building elevations, floor plans, and sign details. Site plans shall be designed to meet all applicable provisions of this Ordinance.

(b) Posting Notice of Site Plan Review

Applicant shall be responsible for posting a sign providing public notice of site plan review. Failure to post said sign fifteen (15) calendar days prior to Planning Commission review, shall cause the application to be withdrawn from the meeting agenda. Said sign shall not be an advertisement sign for the proposed project, but an advertisement of the Planning Commission meeting dates and times in accordance with the standards established for such provided in the Supplemental Information.

15-6 WAIVER

The Director of Community Development may waive certain requirements contained in this Article if, in his/her opinion, the requirements are not essential to a proper decision on the project; or, he/she may supplement the list with other requirements deemed necessary to clarify the nature of the proposed development.

15-7 ISSUANCE OF SITE DISTURBANCE PERMIT

Each person, firm, corporation, utility, entity or agent thereof preparing to engage in any site preparation and/or construction activities shall acquire a site disturbance permit from the Department of Community Development prior to commencement of such activities as established pursuant to the provisions of this Article and no such activity shall commence prior to the approval of a site plan by the Planning Commission or administrative review by the Director of Community Development as required in *Article 15, Site Plan Review* § 15-1. Fees for said permit and permit extension requests are enumerated in *Article 34, Schedule of Fees.*

15-8 BOND REQUIREMENT FOR OFF-SITE IMPACTS

(a) Whenever a person, firm, corporation, developer or other entity proposes to develop a commercial, public, semi-public or multi-family, or mixed use project that, in the opinion of the Director of Community Development constitutes a land disturbing activity which may pose a risk of drainage and/or siltation damage outside the boundaries of the project, such person, firm, corporation, developer or other entity conducting the land disturbing activity shall be required to submit a non-cancelable performance bond in the name of the permittee, a letter of credit or cashier's check, to the City prior to the issuance of a site disturbance permit.

(b) At the time of the site plan approval, the bond shall become effective and shall extend for a period of at least two (2) years following the issuance of the certificate of occupancy by the City. The bond shall be in the amount of twenty percent (20%) of the total cost for the performance of all site work. Said bond shall cover drainage, erosion and siltation damage, if any.

(c) The Director of Community Development or other administrative official as designated by the City Council shall determine the prescribed bond, as well as, the adequacy and the security thereon.

15-9 RELEASE OF BOND

(1) At the expiration of two (2) years from the issuance of the Certificate of Occupancy, the Director of Community Development and the Site Containment Officer or designee of the Building Official shall determine if the drainage design implementation of the project has:

(a) Been performed in accordance and continues to functions within the parameters of the design standards as set forth by the project engineer;

(b) Had any impact on any streams, waterways, or third parties that have been minimized through mitigation efforts;

(c) Received from the project engineer a certificate of performance which states the drainage facilities have been constructed in accordance with the plans, specifications, and engineering guidelines.

(2) The City may release the developer and/or the bond holder from further obligations under said bond based upon the evaluation and recommendation of the Director of Community Development, Director of Public Works and/or the Site Containment Officer, or designee of the Building Official, City Engineer and the Planning Commission.

(3) If it is determined that the requirements of this section have not been met, then the bond may be extended for one six (6) month interval to allow the developer and/or bond holder additional time to correct the deficiencies which prohibit the release of bond. If the site contractor is unable and/or unwilling to satisfy the deficiencies as enumerated by the Director of Community Development, Director of Public Works and/or the Site Containment Officer, or designee of the Building Official or City Engineer, the entire bond shall be forfeited with the bond being payable to the City of Daphne for the direction of such work and/or activities necessary for the completion of the improvements. The developer and/or bond holder of the property thereof shall be liable for any additional cost incurred.

15-10 ISSUANCE OF BUILDING PERMIT

Upon approval of the site plan, either as submitted or with changes and/or special conditions required by the Planning Commission, the Building Official may issue a building permit for a portion or all of the proposed development provided the application is in compliance with all applicable City, County, as well as, state and federal requirements.

15-11 FEES & APPLICATION WITHDRAWAL PROCEDURES

An application for site plan review, site disturbance permit and extension requests shall be accompanied by the appropriate fee as specifically enumerated in *Article 34, the Schedule of Fees.* If, for any reason, an item scheduled for initial presentation before the Planning Commission is requested to be tabled or withdrawn within seven (7) calendar days of submission to the Department of Community Development, then the application fee will be credited toward re-submittal of the application; however, beyond the seven (7) calendar day period, fees shall not be refunded nor credited toward subsequent submittals. The request to withdraw or table the item shall be submitted in writing to the Department of Community Development prior to the scheduled hearing date.

ARTICLE XVI
PARKING REQUIREMENTS FOR ALL DISTRICTS

16-1 GENERAL

Off-street automobile storage or parking space shall be provided with vehicular access to a street or alley and shall be equal to the minimum requirements for the specific land use set forth as otherwise provided herein.

The required number of parking spaces for any number of separate uses may be combined in one lot, but the required space assigned to one use may not be assigned to another use at the same time, except that portion of the parking space required for an existing church whose peak attendance will be at night or on Sunday, may be assigned to a use which will be closed at night or on Sunday.

Areas reserved for off-street parking in accordance with the requirements of this Ordinance shall not be reduced in area or changed to any other use unless the permitted use which it serves is discontinued or modified, except where equivalent parking space is provided to the satisfaction of the Planning Commission.

Off-street parking in existence prior to the enactment of this Ordinance in connection with the operation of an existing building or use shall not be reduced to an amount less than hereinafter required for a similar new building or use.

For existing commercial uses in any business district and other similar areas desiring to expand, but unable for good and sufficient reason to provide parking at the standard required in the following schedule, the Board of Zoning Adjustment may grant relaxation of the strict application of these requirements on appeal, subject to the regulations governing appeals and variances.

Where business and multi-family unit developments require large numbers of parking spaces, such spaces may be accommodated in parking decks provided that no such parking deck shall exceed three (3) levels above ground or twenty-five (25%) percent of the height of the principal structure, whichever is greater.

A parking deck design shall be compatible with the design of the principal structure and shall be submitted as a part of the overall site plan. The parking deck shall comply with the minimum requirements of this Ordinance.

16-2 PARKING SCHEDULE

LAND USE	PARKING REQUIREMENTS
(a) Dwellings	
1) One and two families:	Two (2) spaces for each dwelling unit.
2) Multiple families:	Two (2) spaces for each unit.
3) Hotels without restaurants, lounges, or banquet facilities:	One (1) space for each bedroom.
4) Hotels with in-house restaurants, banquet facilities, or convention/meeting capabilities:	One and one-half (1.5) spaces for each bedroom.
5) Motels, Tourist Courts, and Tourist Homes:	One and one-half (1.5) spaces for each guest bedroom.
6) Mobile Home Courts and Parks:	Two (2) spaces per unit.
7) Boarding, Rooming Houses and Dormitories:	One (1) space for each guest bedroom.
(b) Public Assembly	
1) Churches or Other Places of Worship:	One (1) space for each four (4) seats in the main auditorium or sanctuary.
2) Private Clubs, Lodges and Fraternal Buildings, (not providing overnight accommodations):	One (1) space for each hundred (100) square feet of building under roof.
3) Theaters, Auditoriums, Coliseums, Stadiums, and Similar Places of Assembly:	One (1) space for each four (4) seats.
4) Libraries, Museums:	One (1) space for each five hundred (500) square feet of gross floor area.
5) Schools, including Kindergartens, Play-schools, and Day Care Centers:	One (1) space for each four (4) seats in assembly hall, or one (1) space for each employee, including teachers and administrators, whichever is greater, plus five (5) spaces per classroom for high school and colleges.

LAND USE	PARKING REQUIREMENTS
(6) Skating Rinks, Dance Halls, Pool Rooms and Other Places of Amusement or Assembly without Fixed Seating Arrangements:	One (1) space for each two hundred (200) square feet of floor area.
(7) Bowling Alleys:	Four (4) spaces for each alley/lane.
(c) Health Facilities	
Hospitals, Sanitariums, Nursing Homes for the Aged and Similar Institutional Uses:	One (1) space for each four (4) beds, plus one (1) space for each employee on the maximum shift.
1) Kennels and Animal Hospitals:	A parking area equal to thirty percent (30%) of the total enclosed or covered area.
2) Medical, Dental and Health Offices and Clinics:	One (1) space for each two hundred square feet (200 sq. ft.) of floor area used for offices and similar purposes.
3) Mortuaries and Funeral Parlors:	Ten (10) spaces per parlor chapel unit, or one (1) space per two (2) seats, whichever is greater.
(d) Business	
1) Commercial Establishments and Office (including but not limited to the following):	
Food Stores, Furniture Stores, General Business, (commercial or personal service establishments catering to the retail trade, but excluding food stores); and/or, Governmental Offices, Office Buildings, (including banks, businesses, commercial and professional offices and buildings but excluding medical, dental and health offices and clinics); and/or, Public Utilities, (such as telephone exchanges and substations, radio and TV stations).	Four (4) parking spaces for up to four hundred square feet (400 sq. ft.) limited to the square feet of gross floor area, plus one (1) parking space for each additional four hundred square feet (400 sq. ft.) of gross floor area, up to five thousand square feet (5,000 sq. ft.), plus one (1) parking space for each additional two hundred square foot (200 sq. ft.) of gross floor area over five thousand square foot (5,000 sq. ft).

LAND USE	PARKING REQUIREMENTS
Restaurants, (including bars, bars grills, diners, cafés, taverns, night-clubs, lunch counters, and all similar dining and/or drinking establishments).	One and one-fourth (1.25) spaces for each four (4) seats.
(e) Shopping Centers	One (1) space per each two hundred square feet (200 sq. ft.) of gross floor area.
(f) Marinas	Two (2) spaces per berth (also applies to dry storage).
(g) Industries	
(1) Commercial, Manufacturing and Industrial establishments (not catering to the maximum retail trade):	One (1) space for each employee on the working shift, plus one (1) space for each vehicle operating from the premises.
(2) Wholesale establishments:	One (1) space for every fifty square foot (50 ft) of customer service area, plus two (2) spaces for each three (3) employees on the maximum working shift, plus one (1) space for each company vehicle operating from the premises.
(3) Electric Power and Gas Substation:	Twenty five percent (25%) of the parcel on which located or four (4) spaces, whichever is smaller.
(h) Any use not specified by these regulations:	One (1) parking space for each three hundred square feet (300 sq. ft.) of gross floor area in the building. Where the use is mixed, total requirements for off-street parking shall be the sum of the requirements for the various uses computed separately.

16-3 DESIGN STANDARDS

(a) Definition:

An off-street parking space is an all-weather surfaced area not in a street or alley and having an area of not less than one hundred seventy-one square feet (171 sq. ft) and minimum dimensions of nine feet (9 ft) by nineteen feet (19 ft), exclusive of driveways, permanently reserved for the temporary storage of one automobile and connected with a street or alley by an all-weather surfaced driveway which afford unobstructed ingress and egress to each space.

(b) Permit:

A site disturbance permit shall be required for any parking area with a design capacity for six (6) or more vehicles. Each person, firm, corporation, utility, entity or agent thereof engaged in any site preparation and/or construction activities shall acquire a Site Disturbance Permit from the Department of Community Development prior to commencement of such activities as established pursuant to the provisions of this Article. Fees for said permit shall be as enumerated in *Article 34, Schedule of Fees*.

(c) Parking Area Dimensions:

The design and dimensions of the parking area shall be in accordance with the following Dimension Table and provide for handicapped parking spaces and sidewalk accessibility in accordance with the Americans with Disabilities Act.

PARKING DIMENSION TABLE

Curb Angle of Parking	Length Per Car	Stall Depth	Access Driveway Width
0 ^{o}	23'0"	9'0"	12'0"
20 ^{o}	20'4"	15'0"	11'0"
30 ^{o}	18'0"	17'4"	11'0"
40 ^{o}	14'0"	19'2"	12'0"
45 ^{o}	12'9"	19'10"	13'0"
50 ^{o}	11'9"	20'5"	14'0"
55 ^{o}	11'1"	20'3"	15'6"
60 ^{o}	10'5"	21'0"	18'0"
70 ^{o}	9'8"	21'0"	19'0"
80 ^{o}	9'8"	20'4"	24'0"
90 ^{o}	9'0"	19'0"	24'0"

(d) Width of Two-Way Access Driveways:

The minimum width of two-way access driveways within parking areas shall be twenty-four feet (24 ft).

(e) Paving Standards:

Parking spaces and driveways shall be paved to the standards established by the City of Daphne.

(f) Drainage:

Off-street parking facilities shall be drained to prevent damage to abutting property and streets to prevent pollutants from draining onto the adjacent lots. Landscaped and perimeter areas shall be so graded as to receive a reasonable portion of the rainfall from the surrounding pavement. Protective curbing placed around landscaped areas shall leave openings for water to flow onto unpaved areas.

(g) Off-Street Loading and Unloading Space:

Off-street loading/unloading spaces shall be provided as hereinafter required by this Ordinance.

(1) Size of Spaces:

Each off-street loading/unloading space shall have minimum dimensions of fourteen feet (14 ft) in height, twelve feet (12 ft) in width, and fifty-five feet (55 ft) in length.

However, upon sufficient demonstration that a particular loading space will be used exclusively by shorter trucks, the Planning Commission may reduce the minimum length accordingly to as much as thirty-five feet (35 ft).

(2) Connection to Street or Alley:

Each required off-street loading and unloading space shall have direct access to a street or alley or have a driveway which offers satisfactory ingress and egress for trucks.

(3) Floor Area More Than Ten Thousand Square Feet (10,000 sq. ft):

There shall be provided for each hospital, institution, hotel, commercial or industrial building, or similar use requiring the receipt or distribution of materials or merchandise and having a floor area of more than ten thousand square feet (10,000 sq. ft), at least one (1) off-street loading and unloading space for each ten thousand square feet (10,000 sq. ft) of floor space or fraction thereof.

Such space shall be so located as not to hinder the free movement of pedestrians and vehicles over a sidewalk, street, or alley.

(4) Floor Area Less than Ten Thousand Square Feet (10,000 sq. ft):

There shall be provided for each commercial or industrial building requiring the receipt or distribution of materials or merchandise and having a floor area of less than ten thousand square feet (10,000 sq. ft), sufficient off-street loading and unloading space, not necessarily a full space if shared by an adjacent establishment, so located as not to hinder the free movement of pedestrians and vehicles over a sidewalk, street, or alley.

(5) Location:

All required off-street loading and unloading spaces shall be located on the same lot as the building which they are intended to serve or on an adjacent lot when shared with the use occupying said adjacent lot.

(6) Permanent Reservation:

Areas reserved for off-street loading and unloading in accordance with the requirements of this Ordinance shall not be reduced in area or changed to any other use unless the permitted use which is served is discontinued or modified, except where equivalent loading and unloading space is provided and approved by the Planning Commission.

(h) Off-Street Parking, Loading/Unloading Spaces for Mini-warehouses:

(1) All one-way driveways shall provide for one ten foot (10 ft) travel lane. Traffic direction and parking shall be designated by signing or painting.

(2) All two-way driveways shall provide for one ten foot (10 ft) parking lane and two (2) twelve foot (12 ft) travel lanes.

(3) Whenever applicable, two (2) parking spaces shall be provided for the manager's quarters plus one (1) additional space for every twenty-five (25) storage cubicles to be located at the project office for use of clients.

(i) Storage and Parking of Trailers and Vehicles:

(1) No more than one commercial vehicle per dwelling shall be permitted. In no case shall a commercial vehicle be used for hauling explosives, gasoline, or liquefied petroleum products.

(2) Travel trailers or motor homes, hauling trailers or boat trailers shall be permitted if parked or stored behind the front building setback line.

(3) A travel trailer shall not be occupied either temporarily or permanently while it is parked or stored in any area, except in a recreational vehicle park as authorized in *Article 27, Recreational Vehicle Park Provisions*.

(4) A wrecked or disabled vehicle which cannot be moved under its own power shall not be permitted on or near lots with dwelling units. The vehicles shall be classified as junked vehicles and shall be removed to a junk yard at the owner's expense.

ARTICLE XVII
PROCEDURES FOR SUBDIVISION REVIEW

17-1 PRE-APPLICATION & PRE-CONSTRUCTION CONFERENCES

(a) Pre-Application Conference:

Whenever the subdivision of a tract of land within the extraterritorial planning jurisdiction of the Planning Commission is proposed, the subdivider should consult informally with the planning staff of the City of Daphne and Baldwin County, prior to submittal with the Planning Commission(s) to ensure compliance with the required regulations. No fee shall be charged for the review and no formal application shall be required.

(b) Pre-Construction Conference:

After preliminary plan approval and before the issuance of a site disturbance permit, a pre-construction conference shall be held between the developer, contractors, the representatives from the Departments of Community Development, Public Works, Building Inspections; Riviera Utilities, Daphne Utilities, any other applicable public or private utility company, local, state, and/or federal agency. At the pre-construction conference, participants will discuss issues related to permitting, construction safety, general expectations during construction, final inspection protocol, etc.

17-2 MASTER PLAN SUBMITTAL

Any subdivision or development which is to be developed in phases or units shall require a master plan of the proposed subdivision or development which shall be submitted to the Planning Commission for approval prior to submitting a preliminary plat application.

The subdivider shall submit to the Department of Community Development, a written request for review and approval by the Planning Commission and a copy of said master plan. The master plan shall be of sufficient detail to show the proposed street and lot layout, drainage, utilities, detention, common, recreational, and landscaped areas.

17-3 PRELIMINARY PLAT APPLICATION

Prior to making any improvements, the subdivider shall submit to the Planning Commission a preliminary plat of the proposed subdivision for review in accordance with the following procedure. These items shall be received in the Department of Community Development not less than thirty (30) calendar days prior to a regularly scheduled meeting of the Planning Commission at which meeting the subdivision plat is to be formally submitted for review.

(a) Subdivider's Responsibility:

The subdivider shall submit to the Department of Community Development the following:

(1) Completed application on prescribed forms; a copy of a recorded warranty deed of the subject property (as proof of ownership); the preliminary plat and subdivision construction plans in accordance with *Section 17-3, Plat Conten*t; Owner's Indemnification and Maintenance Agreement Form for Detention Facilities and Common Areas; a list of adjacent property owners and a Certification of Property Owners Notification Form in accordance with specifications provided in the Preliminary Plat Supplemental Documentation List in the Appendix; documentation of all applicable utility companies' service availability and willingness to provide services; and the, the filing fee as specifically enumerated in *Article 34, Schedule of Fees.*

(2) The subdivider shall submit a preliminary plat and utility sheets to each utility company for review. Electronic copies shall be provided to the Department of Public Works, Bureau of Fire Prevention, Riviera Utilities, Daphne Utilities and the Building Department. The subdivider shall submit a plat and applicable documents as may be necessary to any and all applicable utility companies, local, state and/or federal agency for review. Sign details shall be submitted to the Code Enforcement Officer for review.

(b) Plat Content:

The preliminary plat shall contain all information as reflected on the current Preliminary Plat Supplemental Documentation List as provided in the Appendix. The checklist may be modified at the discretion of the Director of Community Development when applicable.

(c) Fees & Application Withdrawal Procedures:

An application for plat review shall be accompanied by the appropriate fee as enumerated in *Article 34, the Schedule of Fees*.

(1) Withdrawal of Application by the Applicant:

If, for any reason, an item scheduled for initial presentation before the Planning Commission is withdrawn without having been presented, then the applicant shall re-file a new application and applicable fees. The written request to withdraw shall be signed by the applicant and authorized agent and shall be submitted to the

Department of Community Development prior to the scheduled hearing date.

If the project is withdrawn within seven (7) calendar days of submission, then the application fee shall be credited toward re-submittal of the application; however, beyond the seven (7) calendar day period, fees shall not be refunded nor credited toward subsequent submittals. The application fees shall be required for any future application. The request to withdraw or table the item shall be submitted in writing to the Department of Community Development prior to the scheduled hearing date.

(2) Request by the Applicant to Table Final Plat Prior to Hearing Date

If, for any reason, an item scheduled for initial presentation before the Planning Commission is requested to be tabled without having been presented, then the applicant shall incur the costs required to re-notify adjacent property owners of the future meeting or hearing at which time the item will be considered in accordance with this subsection. If the project is withdrawn within seven (7) calendar days of submission, then the application fee and notification fee will be credited toward re-submittal of the application; however, beyond the seven (7) calendar day period, fees shall not be refunded nor credited toward subsequent submittals. The written request to table the item and reschedule said meeting shall be accompanied by additional mailing labels, certified property owner's list and certification form and the appropriate fee as enumerated in *Article 34, Schedule of Fees.*

(d) Department of Community Development Review:

The Department of Community Development shall proceed with the preliminary plat review as follows:

(1) Plat Study:

During the thirty (30) calendar days prior to the next regularly scheduled meeting, the Department of Public Works, Bureau of Fire Prevention, Riviera Utilities, Daphne Utilities, Building Inspections Department and any applicable utility company, local, state, and/or federal agency shall review plans and submit recommendations to the Director of Community Development prior to the initial hearing on the preliminary plat.

(a) Whenever a person, firm, corporation, developer or other entity proposes to develop a commercial, public, semi-public or

multi-family, or mixed use project that, in the opinion of the Director of Community Development constitutes a land disturbing activity which may pose a risk of drainage and/or siltation damage outside the boundaries of the project, such person, firm, corporation, developer or other entity conducting the land disturbing activity shall be required to submit a non-cancelable performance bond in the name of the permittee, a letter of credit or cashier's check, to the City prior to the issuance of a site disturbance permit.

(b) At the time of the preliminary plat approval, the bond shall become effective and shall extend for a period of at least two (2) years following final plat approval by the City. The bond shall be in the amount of twenty percent (20%) of the total cost for the performance of all site work. Said bond shall cover drainage, erosion and siltation damage, if any.

(c) The Director of Community Development or other administrative official as designated by the City Council shall determine the prescribed bond, as well as, the adequacy and the security thereon.

(2) Notice of Public Hearing:

The Planning Coordinator or designee of the Director of Community Development shall distribute public notice of the time and place of the hearing and shall send notice of public hearing on said preliminary plat by certified mail to the owner of record, the subdivider, and the owners of record of abutting land at least five (5) calendar days prior to the hearing.

(3) Commission Action:

The preliminary plat is considered to be formally and officially submitted at the regularly scheduled meeting of the Planning Commission. Per Section 6-6 “An affirmative vote of not less than six (6) members shall be required for approval of subdivisions, pursuant to Section 11-52-10, the Code of Alabama, 1975, (as amended).”

At this meeting, the Commission may either:

(a) Approve the preliminary plat.

(b) Conditionally approve the preliminary plat:

In this case, the conditions shall be stated in the hearing and presented to the subdivider in writing. If necessary, the

Commission may require the subdivider to submit a revised preliminary plat prior to acquiring a site disturbance permit.

(c) Disapprove the preliminary plat:

If disapproved, the reasons for such action shall be stated in the public hearing and presented to the subdivider in writing, and if possible, recommendations made as to the basis on which the plat will be approved. The subdivider may resubmit the plat with due consideration to the recommendations stated by the Planning Commission at any subsequent regularly scheduled meeting of the Commission in accordance with these regulations.

(d) Delay action on the preliminary plat:

The Commission shall act to approve or disapprove a subdivision plat within thirty (30) calendar days after its formal submission at a regularly scheduled Planning Commission meeting. If the applicant waives this requirement and consents to an extension, then the Commission may delay action on the plat up to thirty (30) additional calendar days.

If no action is taken within the initial thirty day period, or if no action is taken upon the thirty (30) calendar day extension, said plat shall be deemed to have been approved and correspondence to that effect shall be issued by the Commission on request.

In any case, the Commission shall notify the subdivider either verbally or in writing of the action taken at the hearing. If any of the requirements of these regulations are modified or waived, they shall be specified and the reasons therefore given.

(e) Effect of Preliminary Plat Approval:

(1) Approval shall be authorization for the subdivider to acquire a site disturbance permit as prescribed herein from the Department of Community Development. The owner or developer shall provide to the Department of Community Development, the appropriate signed application form, any applicable state/federal permits, a cost estimate for site work, the fee for a site disturbance permit as enumerated in *Article 34, Schedule of Fees*, and proof of the contractor's Daphne business license.

(a) Preliminary plat approval shall become void one (1) year

from the date of Planning Commission approval if no site disturbance permit has been acquired for the project. The site disturbance permit and preliminary plat shall both become void one (1) year from the issuance of the site disturbance permit if no substantial building or construction activity has occurred.

(b) Prior to expiration of the initial site plan and/or site disturbance permit, a one (1) year extension of time may be granted for the approved preliminary plat and the site disturbance permit by the Director of Community Development, upon written request of the applicant, stating good reason.

(c) If no construction activity has occurred after the expiration of the extended time, an additional one (1) year extension of time may be considered by the Planning Commission. At no time shall any preliminary plat and related site disturbance permit be granted an extension beyond this time. The plat and site disturbance permit shall automatically be deemed null and void. The subdivider shall be required to resubmit the preliminary plat application and follow procedures as outlined in *Section 17-3(a), Subdivider's Responsibility*.

(2) Said approval shall be authorization to begin work, to proceed with the construction of all minimum improvements as enumerated in *Article 11, Minimum Standards and Required Improvements*, including the grading of streets, and staking of lots, etc.

(3) Preliminary plat approval does not constitute final plat approval nor does it authorize official recording of the plat nor does it constitute or effect an acceptance by the City of Daphne of any street or other open space shown on the preliminary plat.

(4) When all required improvements are installed the developer or owner shall in accordance with *Article 11, Minimum Standards and Required Improvements*, request a final inspection by the design engineer, the registered landscape architect, all applicable City departments, public and/or private utility companies, and when applicable, Baldwin County officials. Said inspections shall be conducted prior to submitting an application for final plat approval. Final inspection reports shall be provided with the application for Final Plat approval.

17-4 FINAL PLAT APPLICATION

(a) Financial Guarantee of Performance in Lieu of Full Installation of Minimum Improvements:

The subdivider shall be responsible for the full installation of all required minimum improvements in the proposed subdivision prior to the submission of a final plat application to the Planning Commission or after no less than ninety percent (90%) of the minimum improvements have been installed, the subdivider may issue a financial guarantee with surety to the City of Daphne that the remaining minimum improvements shall be completed.

As such, one (1) or more of the following may be accepted as financial guarantee with surety payable to the City of Daphne: a letter of credit or certified check from an Alabama lending institution in an amount not to exceed one hundred and fifty percent (150%) of the cost of the required improvements remaining.

A cost estimate for any remaining civil improvements shall be certified and submitted by the design engineer with the application for final plat approval; a cost estimate of any remaining landscaping improvements must be certified and submitted by the professional landscape architect with the application for final plat approval and the financial guarantee.

(b) Street Maintenance Bond:

The developer/owner shall submit to the Department of Community Development a maintenance bond payable to the City of Daphne which shall be valid for a period of two (2) years. The bond shall be in an amount equal to twenty percent (20%) of the total street, utility, and drainage improvements in the subdivision. Said bond shall be required as a condition to dedication and acceptance of any new streets within the corporate limits. The Director of Community Development or Director of Public Works other administrative official as designated by the City Council shall determine the adequacy of said bond and security thereon.

The maintenance bond period shall begin upon the acceptance of the street and drainage improvements by resolution of the City Council. No less than thirty (30) calendar days prior to the expiration of said maintenance bond, an inspection shall be conducted by the Department of Public Works and the Environmental Programs Manager or Site Containment Officer to ensure that the improvements are in satisfactory condition prior to acceptance.

The City Council, upon the recommendation of the Department of Public Works and the Environmental Programs Manager or Site Containment Officer, may release or extend a maintenance obligation. An extension of the

maintenance bond shall be for a period no greater than one additional year.

(c) Subdivider's Responsibility:

Within one (1) year of the date of preliminary plat approval or prior to the expiration of an extension granted by the Director of Community Development or the Planning Commission as prescribed in *Section 17-3, Effect of Preliminary Plat Approval*, the subdivider shall submit the following to the Department of Community Development:

(1) File the required application on the prescribed forms;
(2) Submit a copy of the final plat and as-built drawings of the site in accordance with *Section 17-3, Plat Content*;
(3) Submit a petition for street acceptance on prescribed forms accompanied by a street maintenance bond in an amount equal to twenty percent (20%) of the total street, utility, and drainage improvements in the subdivision; certification of improvements form signed and sealed by the design engineer and a street test report from an independent testing laboratory noting satisfactory condition of the street;
(4) Submit filing fee as enumerated in *Article 34, the Schedule of Fees*;
(5) If applicable, submit a financial guarantee of performance of the remaining ten percent (10%) of the minimum improvements and a certified cost estimate of any/all remaining work to be completed;
(6) Private restrictive covenants and deed restrictions;
(7) All inspection reports and permits; and,
(8) Applicable test reports.

These items shall be received in the Department of Community Development not less than thirty (30) calendar days prior to a regularly scheduled meeting of the Planning Commission at which meeting the subdivision plat is to be formally submitted for review.

(d) Final Plat Content:

The final plat shall conform to the conditions of the approved preliminary plat. It shall show sufficient detailed data to readily determine and to accurately reproduce on the ground the location, bearing and length of every street line, lot line, boundary line, block line, and building line.

The plat shall be clearly drawn on a 24 x 36 inches sheet, at a scale of not less than one hundred (100) feet to the inch, and shall contain all information shown on the current departmental check list for a final plat (see Appendix), which may be modified at the discretion of the Director of Community Development when applicable.

(e) Fees and Application Withdrawal Procedures:

Said fees and procedures are as prescribed in *Article 17-3, Fees & Application Withdrawal Procedures,* herein.

(f) Department of Community Development Review:

The Department of Community Development shall proceed with the final plat review as follows:

(1) Plat Study:

During the thirty (30) calendar days prior to the next regularly scheduled meeting, the Department of Community Development shall review the final plat for compliance with the subdivision regulations and submit any recommendations to the Planning Commission at its meeting.

(2) Commission Action:

The final plat is considered to be formally and officially submitted at the regularly scheduled meeting of the Planning Commission. At this meeting, the Commission may either:

(a) Approve the final plat.

(b) Disapprove the final plat:

Such action may result if the final plat is found to be in conflict with the approved preliminary plat or with the subdivision regulations.

A statement of the reasons for disapproval shall be forwarded by letter to the subdivider and one copy being filed in the records of the Department of Community Development. No certificate of approval shall be given. The subdivider may resubmit the final plat application for another hearing after the corrections as noted by the Planning Commission have been made to the plat.

(c) Delay action on the final plat:

The Commission shall act to approve or disapprove a subdivision plat within thirty (30) calendar days after its formal submission at a regularly scheduled Planning Commission meeting. If the applicant waives this requirement and consents to an extension, then the Commission may delay action on the plat up to thirty (30) additional calendar days.

If no action is taken within the initial thirty (30) calendar day period, or if no action is taken upon the (30) thirty calendar day extension, said plat shall be deemed to have been approved and correspondence to that effect shall be issued by the Commission on request.

(3) Records:

In any case, the Planning Commission shall retain one (1) copy of the final plat as presented to the Planning Commission in its files with indication in writing of the action taken at the hearing.

If any of the requirements of these regulations are modified or waived, they shall be specified and the reasons therefore given.

(g) Effect of Final Plat Approval:

Approval of the final plat by the Planning Commission shall authorize the owner, subdivider, or his agent, to have said plat recorded in the Office of the Judge of Probate of Baldwin County.

The plat shall be filed prior to the sale of any lot in the subdivision. Copies of all private covenants, deed restrictions, and certifications shall be filed with the final plat. Once approval has been given and endorsed in writing on the plat by the Planning Commission and/or the Director of Community Development, no changes, erasures, modifications or revisions shall be made on said plat.

In the event that any subdivision plat, when recorded, contains changes which have not approved by the Planning Commission, said plat shall be considered null and void, and the Planning Commission shall then file the corrected plat as approved, noting the reason for such filing. Any erasures made on a plat prior to its signing shall be initialed and dated by the Planning Commission Chairman or other authorized agent and/or the Director of Community Development, at the time of the signing.

The approval of the final plat shall be recorded within a period of one (1) year following the date of such approval. Upon recording, the owner or developer shall furnish to the Department of Community Development a copy of the

recorded plat and recorded restrictive covenants. Additionally, the Articles of Incorporation for the establishment of a property owner's association shall be furnished to Community Development upon recording.

Approval and recordation of the final plat does not result in the acceptance of any street or other public space shown on the plat. Council resolution accepting dedication of streets is required as noted in *Section 17-4, Streets*, herein.

(h) Streets - Legal Status:

The City of Daphne shall not accept, open, improve, maintain, grade or light any street right(s)-of-way and/or drainage and utility easement; authorize water mains, sanitary sewer, or connections to be made to any street, unless:

1. The street right(s)-of-way is a part of a subdivision plat approved by the Planning Commission; and,

2. Such street has been accepted or otherwise granted the legal status of a public street; and,

3. The right(s)-of-way corresponds with a street shown on the Comprehensive Plan; and,

4. Petition for acceptance and dedication of the street right(s)-of-way and drainage and utility easement(s) has been accepted and adopted by City Council Resolution.

ARTICLE XVIII

DRAINAGE, STORMWATER MANAGEMENT FACILITIES AND EROSION/SEDIMENT CONTROL

18-1 GENERAL

A. Purpose:

The purpose of this section is to provide a guide for development wherein the ecological impacts to the environment are minimized through appropriate design, landscaping, erosion control, stormwater management, and proper planning. The intent of the City of Daphne is to protect valuable natural resources, the natural environment and the quality of life for all its citizens. In order to preserve the integrity, stability and the value of land, the City encourages the use of innovative, LEED-certified (Leadership in Energy and Environmental Design) and/or other "green" practices in development design. Where such methods/practices are proposed for a development said practices shall be designed and certified by a credentialed professional in his/her design field.

B. Applicability and Use:

The following requirements shall apply to uses and developments in each overlay district and zoning district within the Daphne corporate limits, except where noted herein. As a general policy the objective of each drainage system design shall be the safety and protection of the traveling public, the environment, the City of Daphne and private property.

C. Jurisdiction:

All projects which fall under the inspection, permitting, or extraterritorial planning jurisdiction of the City, on items related to stormwater management and site development within the corporate limits of the City.

D. Permitting:

No land disturbing activity shall take place on any site prior to the issuance of a Site Disturbance Permit in accordance with *Article 15, Procedures for Site Plan Review in Section 15-4(d), Special Provisions and Article 17, Procedures for Subdivision Review, Section 17-3(e), Preliminary Plat Application,* of this Ordinance. All permitted sites within the city limits shall post a waterproof Site Disturbance Permit Identification Sign on site during construction. This sign shall identify the permit number, permit holder, contractor and contact phone number. Any and all state/federal permits for such activities shall be obtained and submitted to the City prior to issuance of the site disturbance permit.

E. Technical Reference:

The current version of the Alabama Handbook for Erosion Control, Sediment Control and Stormwater Management on Construction Sites and Urban Areas is hereby adopted as a reference and shall be considered a part of the Land Use and Development Ordinance as an expansion of erosion control provisions not listed. Herein, the book shall be referred to as the "Alabama Handbook for Erosion Control".

F. Professional Civil Engineer:

All engineering plans and specifications submitted for review and/or approval shall be prepared by and under the direct supervision of a registered professional civil engineer, licensed in the State of Alabama. Said professional engineer shall carry Errors and Omissions Insurance at a minimum coverage of one million dollars ($1,000,000). All plans and specifications shall meet the minimum standards and requirements of the City and other applicable local, state or federal authorities.

(1) Plan, profile and special drawing sheets for a project submitted for review shall bear a legible stamp and signature of the professional design engineer in charge. If the name or license number is not clear, the signature and number shall be added.

(2) The professional design engineer shall be qualified in the area of drainage as per the State of Alabama engineering registration laws.

(3) Upon completion of the project, an inspection of the site and drainage facilities shall be conducted by the design engineer. Correspondence in the form of a letter along with a set of as-built final plan sheets and an electronic version in a format deemed acceptable by the City shall thereafter be submitted to the Department of Community Development from the design engineer certifying that all drainage and related facilities have been installed in accordance with approved plans and specifications.

G. Liability:

Use of the information contained herein for placement of any structure or use of land, shall not constitute a representation, guarantee, or warranty of any kind by the City, its offices or employees, of the practicability, adequacy or safety and shall not create liability upon or cause action against any such public body, office, or employee for any damage that may result pursuant thereto.

(1) Any liability associated with the design, performance and operation of the drainage, stormwater management or erosion and sediment control facilities remains with the developer/owner and the project design engineer.

(2) Stormwater management facilities shall be designed in accordance with good engineering practice. The design criteria establish minimum elements of design which must be implemented with good engineering and good workmanship.

H. Pre-Design Conference:

The developer and the design engineer are encouraged to contact the City for a pre-design conference at the conceptual stage of the project. Such conference would be mutually beneficial to outline the complexity and scope of design, applicability of criteria and elimination of possible items of conflict during the review process. Subsequent conferences, during the preparation of plans may be arranged by the design engineer or the developer to obtain preliminary, informal decisions on items in need of clarification.

I. Letter of Transmittal:

In order to facilitate review of plans, all projects shall be submitted with a letter of transmittal which shall include the name of the project, name and address of the owner and/or developer, telephone number of the engineer, and clarification as to the purpose of submittal.

18-2 DRAINAGE AND STORMWATER MANAGEMENT ENGINEERING PLAN CONTENTS

A. General Requirements:

For all developments affecting city rights-of-way and for all proposed subdivisions and site development plans, the developer or the professional design engineer shall submit signed and sealed detailed drainage plans and drainage computations to the City for review and approval. Said drainage plans shall contain a map, narrative and supplemental items as follows:

(1) Map Information:

i. Existing and proposed contours in 1 (one) foot increments (topography shall be based upon the NAVD 88 datum;

ii. Location of existing improvements including roads, parking areas and building footprints along with their proposed finished floor elevations;

iii. Existing drainage system, including but not limited to, pipes, culverts, inlets, ditches, and ponds with data providing invert elevations, slopes, permanent water elevation and other related dimensional data;

iv. Flood zone designation and certification;

v. Elevation of the regulatory lowest floor level, including basement, of all proposed structures;

vi. Elevation to which any non residential structures will be flood proofed;

vii. Drainage basin boundaries, showing direction of flow, including total tributary drainage areas entering the improved area, taking into account any off-site runoff being routed through or around the project in its undeveloped condition;

viii. Size, location, slopes, inverts, types and general configuration of all primary drainage facilities required to route, collect, treat and dispose of stormwater runoff, generated by or passing through the development;

ix. Location of on-site water bodies, ephemeral streams and/or wetlands with details of size and vegetative cover to include normal water elevation, side slopes, and depths of water bodies and for wetlands, the general surface elevation and the wet season water elevation;

x. CBMPP (Construction Best Management Practices Plan) in accordance with the *Erosion Control provisions stated in Section 18-6* below;

xi. Reference the 100 (one hundred) year flood elevation if applicable;

xii. All final plats shall have a section that details that the City reserves the right to require the owners of all drainage facilities to perform needed maintenance to prevent potential flooding hazards.

(2) Narrative:

i. Proposed project including its size, percent pervious versus impervious land usage, total wetlands within site boundaries, and a breakdown of wetland acreage preserved, by type, and acreage removed, by type.

ii. All acres solely for water management purposes shall be noted and the legal method to ensure areas remain devoted.

iii. Times of concentration, intensity, runoff coefficients used for determining runoff for all tributary areas and areas within the development at pre- and post-construction rates.

iv. Discharge rate in cubic feet second (cfs), discharge velocity in feet per second (fps), and any other additional hydraulic data needed to establish that the drainage system will safely convey the flow to an adequate outlet without eroding any property or the channel of flow. Armoring of the receiving channel shall be required where velocities exceed the scour velocity for the given soil

conditions. Discharge and runoff coefficients should be based on full or ultimate build out of the parcel and contributing watershed.

v. Proposed start and completion date for the project.

vi. Description of the extent to which any watercourse will be altered or relocated as a result of the proposed development, if applicable.

(3) Supplemental Information:

i. Design storms used including depth, duration, and distribution;

ii. Staged storage calculations for the project and stage discharge computations for the outfall structure(s);

iii. Differential runoff evaluation consists of determination of rates of runoff before and after development, determination of required volume of retention/detention and verification of adequacy of discharge and control structures.

iv. Runoff routing calculations showing discharges, elevations and volumes retained/detained during applicable storm events;

v. Draw down calculations for detention;

vi. Base flood elevation data for all proposed developments greater than 50 (fifty) lots or 5 (five) acres, whichever is less; if not established refer to the Flood Damage Prevention Ordinance No. 2009-01;

vii. Calculations required for determination of minimum building floor and road elevations;

viii. Calculations for flood plain encroachment, if applicable;

ix. Copies of all federal and state permit applications for the activity.

(4) Acreage in a tabular format:

Sample Table

	Existing		Proposed	
	Acres	%	Acres	%
Total Area				
Building				
Pavement				
Impervious total				
Pervious total				
Wetlands				
Common area				
Recreation area				

B. Provision for Additional Engineer's Review:

The intent of this provision is to protect and improve water quality and stream conditions within the City of Daphne, particularly those on the ADEM 303(d) List of Impaired Streams. The purpose of this provision is to mitigate the impact of potential or future development in support of the Daphne MS4 permit program and to uphold the provisions of this article.

Where deemed appropriate by the Planning Commission, any drainage and stormwater management plan submitted for review by the Planning Commission that could impact a stream listed on the ADEM 303(d) Impaired Streams list, may be subject to an additional review by a qualified professional civil engineer with experience in stormwater management (consultant engineer). The applicant/developer/owner may be required to modify stormwater and drainage plans to accommodate the recommendations of the consultant engineer.

All costs incurred for this additional engineer's review shall be paid by the developer/owner/ applicant.

18-3 DRAINAGE AND STORMWATER MANAGEMENT

A. General Requirements:

(1) Each subdivision plat and site plan submitted for review shall make adequate provisions for stormwater or flood water runoff channels or basins. Storm drains and drainage structures shall be designed and installed as required herein and in accordance with current good engineering practices and standards. The responsible professional design engineer shall submit signed and sealed design computations with said plans.

(2) The professional engineer shall make certain that any spring or surface water that may either exist prior to or as a result of the proposed subdivision or site development design shall be carried away by vegetative swale, pipe, open concrete paved ditch, or any alternate drainage facility certified by the design engineer and subsequently approved by the Planning Commission. Drainage conveyance structures may be located in the road right-of-way where feasible, or in perpetual unobstructed easements of appropriate width. Said drainage conveyance structures shall be constructed in accordance with the Alabama Department of Transportation (ALDOT) Standard Specifications.

(3) Where a public storm drainage system is accessible, the professional engineer shall design stormwater drainage facilities to connect thereto. Storm drainage provisions for each development shall be subject to the specifications and calculations submitted by the design engineer. If no outlets are within a reasonable distance then adequate provisions shall be made for the disposal of stormwater.

(4) Where a public storm drainage system is not accessible, the subdivider shall install all drainage structures necessary to convey the water to a location acceptable to the City and obtain all required easements thereto.

(5) If, in a phased development, a connection to a public storm drainage system will be provided in a future phase of construction then a phasing plan for the project, a master storm drainage plan for the overall development and a bond in the amount of 150% of the cost of installing the appropriate facilities as enumerated in *Article 17, Procedures for Subdivision Review,* Section 4(a) Final Plat Application, shall be submitted upon application for final plat approval. Said master drainage plan shall show the arrangements anticipated for future stormwater disposal.

(6) No development shall be approved unless adequate drainage is provided to the natural drainage watercourse or an existing drainage facility.

i. For all developments, upstream drainage areas shall be accommodated and considered in designing drainage facilities. A culvert, pipe, or other drainage facility, shall in any case, be of sufficient size to accommodate potential stormwater runoff from its upstream drainage area, whether inside or outside the subdivision or development site boundary. The design engineer shall determine the necessary size of the facility based on drainage calculations and provisions of the construction standards and specifications.

ii. For all developments, downstream drainage areas shall be considered in designing drainage facilities. The design engineer shall review the effect of each development on existing downstream drainage facilities outside the area of the development. These drainage studies, together with such other studies as shall be appropriate, may serve as a guide to needed improvements and shall be incorporated into the drainage report to be submitted with the development application.

iii. Stormwater drainage facility design shall note the calculation of a runoff coefficient by measuring the total area of each sub-drainage basin within the project and the areas of each land use which will occur in each basin after construction is complete. These areas shall include off site drainage onto the site as well as the development area. These calculations should also consider future development or build-out on the upstream contributing area based on current land use or zoning.

(7) Where it is anticipated that additional runoff incidental to the development will overload an existing downstream drainage facility, approval of the development may be: denied, delayed, or withheld until provisions have been made to prevent and/or remedy such occurrence by the developer/owner submitting of an Off-Site Impact Bond, as provided in *Article 15, Procedures for Site Plan Review, and Article 17, Procedures for Subdivision Review,* prior to preliminary plat or site plan approval.

(8) The City of Daphne reserves the rights to enforce all Federal and State water quality regulation, as amended

(9) In a site plan review, the Planning Commission may require additional water quality enhancement through the use of stormwater treatment measures such may include, but shall not be limited to oil/gas/grease separators.

B. Flood Prevention:

(1) All proposed developments shall provide adequate storm drainage facilities.

(2) All proposed developments shall meet standards established in the Flood Prevention Ordinance 2009-01, as amended.

(3) Any areas subject to periodic flooding or flooding caused by poor drainage facilities will not be accepted unless the developer or subdivider makes necessary provisions to eliminate such flooding in conformity with the National Flood Insurance Program.

(4) The floor elevations of houses or buildings shall be high enough to be above the regulatory flood.

(5) The floodway easement shall be wide enough to provide for future enlargement of the stream channel as adjacent areas become more highly developed and runoff rates are increased.

(6) Fill may not be used to raise land in areas subject to flood and/or excessive erosion unless permitted by the Flood Plain Manager in accordance with the Flood Prevention Ordinance and provisions provided herein.

(7) If fill is permitted to raise land in areas subject to flood and/or in areas of excessive erosion, said fill shall be subject to the following requirements:

i. Fill shall not restrict the natural flow of water,

ii. Fill shall not advance erosion,

iii. Fill shall not unduly increase flood heights,

iv. Fill shall not be comprised of staining materials, e.g., red clay.

C. Easements:

Easements shall meet all specifications provided herein and shall be labeled on the record plat and/or site development plan.

(1) Where topography or other conditions are such as to make impractical the inclusion of drainage conveyance structures/facilities within road rights-of-way, perpetual unobstructed easements for such drainage conveyance structure/facilities shall be, a minimum of twenty (20) feet in width and located across said property, outside the road lines and with satisfactory access to the road. Drainage easements shall be carried from the road to the natural watercourse or to other drainage facilities.

(2) Where a subdivision or development of land is traversed by a watercourse, drainage way, channel, or stream, there shall be provided a stormwater easement or drainage right-of-way conforming substantially to the lines of such water course, and of such width and construction or both as shall be adequate.

(3) The subdivider shall dedicate by easement land in its natural state on both sides of any existing stream, of an adequate width and to a distance that is adequate to discharge flood waters without cumulatively increasing the water surface elevation more than one foot. Per *Section 18-3(d) Streams and Wetland Buffers*, the easement shall be at least fifty (50) feet wide.

(4) Low-lying lands along watercourses subject to flooding or overflowing during storm periods, whether or not included in areas for dedication shall be preserved and retained in their natural state as drainage ways, except where improvements are warranted and deemed necessary by the design engineer and subsequently approved by the Planning Commission. Said low-lying areas shall be appropriately delineated on the record plat.

D. Stream and Wetland Buffers Zones:

(1) For any flowing or ephermal water body, a fifty (50) ft wide vegetated non-disturbed buffer zone shall be provided on both sides of the stream from the bank. These buffer zones shall be shown on the plat, field verified by the design engineer, flagged prior to project implementation and protected by appropriate measures during all construction phases.

(2) For any delineated wetland area, a thirty (30) ft wide vegetated non-disturbed buffer zone of shall be provided around the wetlands. These buffers shall be shown on the plat/site plan, field verified by the design engineer, flagged prior to project implementation and protected during all construction phases.

(3) When wetlands border, abut, and/or adjoin a stream, the undisturbed buffer zone must extend a minimum of fifty (50) ft from each stream bank and a minimum of thirty (30) ft from the delineated wetland boundary. The wetland buffer is not applicable where the U.S. Army Corps of Engineers has permitted wetland fill for a linear transportation crossing or utility crossing. However, the wetland and/or stream buffer requirements are still applicable to areas adjacent to the permitted activity.

(4) Modifications to the stream or wetland buffers shall be approved by the Planning Commission on a case by case basis. If a modification is requested, the design engineer shall demonstrate through safety or design specifications the need for the modification.

(5) Existing subdivisions platted, prior to the acceptance of this ordinance, are grandfathered from the buffer requirements.

(6) Individual property owners within existing subdivisions shall be responsible for compliance with US Army Corp of Engineers 404 Wetland Regulations. *At any time during or prior to site disturbance, if it is determined by the City of Daphne or a consultant thereto that the parcel potentially has wetlands,* the City shall require a wetland delineation of the parcel.

E. Operations in Lakes or Natural Watercourses:

Land-disturbing activity in connection with construction, in, on, over, under a lake, or natural watercourse shall be planned and conducted in such a manner as to minimize the extent and duration of disturbance of the stream channel. Any and all state and federal permits for such activities shall be obtained and submitted to the City prior to issuance of the Site Disturbance Permit.

F. Permanent Downstream Protection of Stream Banks and Channels:

Provision shall be made for the permanent protection of off-site stream banks and channels from the erosive effects of increased velocity and volume of stormwater runoff resulting from certain land-disturbing activities.

G. Phasing and Platting:

The effective acreage for a project is not limited to a fractional part of the total concept, rather if a project is developed in phases of small plats, the total acreage of the conceptual project shall be considered. Phasing is required on all site disturbance areas of seventeen and one half (17.5) acres, i.e., seven hundred-fifty thousand square feet (750, 000 sq. ft.) or more. The size of each phase will be limited to 17.5 acres or as deemed appropriate by the Planning Commission. The Planning Commission may allow exceptions to the phasing requirement on a case by case basis. In such case, the design engineer shall provide enhanced construction best management practices to ensure maximum mitigation to prevent off-site and water quality impacts.

H. Borrow and Waste Areas:

(1) When the person conducting the land-disturbing activity is also the person conducting borrow or waste disposal activities, areas from which borrow is obtained shall be considered as part of the land-disturbing activity where the borrow material is being used or from which the waste material originated.

(2) When the person conducting the land-disturbing activity is not the person obtaining borrow and/or disposing waste, these areas shall be considered a separate land-disturbing activity.

I. Access and Haul Roads:

Temporary access and haul roads, other than public roads, constructed or used in connection with any land-disturbing activity shall be considered a part of such activity.

18-4 STORMWATER MANAGEMENT FACILITY DESIGN

A. Conveyance Systems:

(1) Culverts:

i. Culverts under arterial roadways shall accommodate a minimum 50 (fifty) year, 24 (twenty four) hour storm frequency design storm unless conditions dictate that 100 (one hundred) year frequency design storm must be accommodated. Design storm criteria will be used by the design engineer based on the site specific conditions that warrant life and property protection.

ii. All culverts within City road rights-of-way must be approved by the City of Daphne and shall conform to Alabama Department of Transportation (ALDOT) standards.

iii. All culverts within State road rights-of-way must be approved and permitted by the ALDOT. In conjunction with the required subdivision or site plan application material, the developer/engineer shall submit a conceptual approval letter from ALDOT to the Department of Community Development for Planning Commission review. A copy of the official ALDOT permit must be submitted to the City prior to final inspection or issuance of the Certificate of Occupancy.

iv. Concrete box culverts shall be designed and constructed according to the latest edition of the Standards and Specifications for Road and Bridge construction, ALDOT.

v. Culvert head walls shall be required on pipe culverts and shall be reinforced concrete.

vi. Special types of head walls may be required by the City when deemed necessary for erosion control.

vii. Riprap may be required at the upstream and downstream end of culverts and shall be placed at these locations based on the velocities at that location.

viii. All roadway cross drain pipes shall be made of reinforced concrete and shall have a minimum diameter of eighteen (18) inches or greater.

ix. Any pipe proposed within a City right-of-way or drainage easement shall be made of reinforced concrete. If other piping is installed therein, said road right-of-way or drainage easement dedication shall not be favorably recommended by the Planning Commission and may not be accepted by the City Council except where deemed appropriate by the Department of Public Works Director.

(2) Bridges:

Bridges shall accommodate a minimum one hundred (100) year, 24 (twenty-four) hour frequency design storms. Design storm criteria will be used by the design engineer based on the site specific conditions that warrant life and property protection. All bridges shall be designed and constructed according to the latest edition of the Standards and Specifications for Road and Bridge construction, ALDOT.

(3) Open Channels and Ditches:

i. Storm drain pipes, open channels, open ditches or swales may be implemented when properly engineered based on site conditions. Open channels and ditches shall be designed to safely accommodate traffic and to prevent hazardous erosion.

ii. The maximum side slope shall be 3:1 (three to one) ratio for all open channels and ditches, unless approved by the Planning Commission upon recommendation of the Director of Public Works. Drainage calculations shall show the volume and velocity for each separate ditch section. Adequate ditch lining shall be determined based on the ditch calculations. Where two open channels converge, some form of energy dissipation, such as riprap, shall be provided.

iii. Where a driveway or ingress/egress easement must cross an existing or proposed ditch, the design engineer shall note upon the plat, the required culvert size(s) necessary to accommodate said crossing(s).

iv. Headwalls and end-walls shall be installed on street culverts.

v. Within any public right-of-way, flared headwalls or slope paved headwalls with a 4:1 (four to one) slope or flatter shall be used.

vi. The recommended maximum flow velocities shall be in accordance with the ranges recommended in the latest edition of the ALDOT Hydraulics Manual.

vii. All open channels and ditches shall be permanently vegetated upon final inspection. Neither seed, mulch, nor a combination thereof will be accepted as vegetation or as a substitute for permanent vegetation. Where sod is used on slopes or around corners, it shall be pinned as specified in the Alabama Handbook for Erosion Control.

(4) Street & Inlets:

i. Inlets shall be provided so that surface water is not carried across any intersection, or carried for a distance of more than five hundred (500) feet in the gutter. When calculations indicate curb capacities are exceeded at a point, catch basins shall be used to intercept flow at that point. The minimum pipe diameter of each storm drain shall be eighteen (18) inches. The stormwater drainage system shall be separate and independent of any sanitary sewer system. In no case shall stormwater empty into the sanitary sewer system.

ii. Profile grades and typical roadway sections shall be submitted with all construction drawings.

(5) Clean Out Access:

Clean out accesses shall be provided at least every three hundred (300) feet for continuous pipes of twenty-four (24) inches in diameter or less and at least every four hundred (400) feet for larger continuous pipes if required. Clean out accesses shall be provided at each angle point and at each change in grade.

B. Stormwater Drainage Detention/Retention Facilities:

(1) General Requirements:

i. Developments which produce an increase in the amount of stormwater runoff shall be required to construct stormwater detention /retention ponds or other approved types of detention devices.

ii. The developer/engineer shall submit, detailed engineering plans to the City including historical runoff, developed runoff, detention/retention pond details, method of discharge, and other information as required for review.

iii. Stormwater detention/retention facilities shall meet all specifications provided herein and shall be labeled as a lot on the record plat and/or site development plan as common area.

(2) Minimum Requirements for Stormwater Management Detention/Retention Facilities:

i. Differential runoff is the difference in rate and volume of stormwater runoff from a parcel or project in its undeveloped natural condition and its developed condition. Post-development release rates shall not exceed pre-development rates. Where practical, the differential runoff should be less.

ii. Detention basins shall detain the first flush from a storm event and release the subsequent runoff water at a pre-development rate for sites twenty (20) acres or less based on the rational method or modified rational method. For sites larger than twenty (20) acres, the pre- and post- calculations shall be based on the Natural Resource Conservation Service (NRCS) Curve Number Method or other accepted engineering methodology. There should also be adequate sizing of the detention basin to store an accumulation of one-half inch (½") sediment during construction of the infrastructure. The first flush volume for any stormwater detention structure must be contained and then slowly released over a minimum time period of 24 (twenty- four) hours and maximum time period of 72 (seventy-two) hours.

iii. The purpose of installing detention structures is to slow or attenuate the peak flows downstream by controlling the release rate. The post-development peak outflow rate shall be limited to the pre-development peak outflow rate as the basis of detention design.

iv. All stormwater detention structures must attenuate the post-development peak flow rates from the 2 year, 5 year, 10 year, 25 year, 50 year and 100 year 24 hour design storms to release a graduated discharge at or below pre development peak flow rates.

v. The following conditions and limitations should be observed in location, selection and use of the method of detention:

a. Detention facilities shall be located within the parcel limits of the project under consideration.

b. No detention or ponding shall be located within public road rights-of-way.

c. Location of detention facilities immediately upstream or downstream of the project may be considered by special request if proper documentation is submitted with reference to practicality, feasibility and proof of ownership or right-of-use of the area proposed.

vi. During construction of a residence, allowances for silting under denuded soil conditions for a period not less than one (1) year is recommended.

vii. All permitted site development projects shall incorporate stormwater detention and first flush treatment as part of the design. Stormwater detention is not required in the following two situations:

a. The project discharges stormwater runoff directly into a tidally influenced water body. This does not include discharges of stormwater runoff that flows through a public drainage system or across a downstream property boundary prior to entering the tidal water body.

b. Where stormwater detention for a project site is either unwarranted or impractical, the design engineer shall submit complete hydrologic and hydraulic computations to support this conclusion. This conclusion must be affirmed by the Department of Community Development. Typically this might occur in the very lowest downstream reaches of a major watershed, if it can be proved that un-detained stormwater should be discharged quickly to avoid peak discharge timing for the entire watershed. The hydrologic analysis should include more than one representative downstream location for comparing hydrographs.

c. Even if stormwater detention is waived by the Planning Commission for the above two situations, the site development must still provide first flush treatment, oil/gas/grease separation, and/or any other filtration system deemed appropriate in order to protect water quality.

viii. All detention basin slopes shall be permanently stabilized with a perennial vegetative cover prior to final inspection. Seed and mulch will not be accepted.

ix. Detention facilities are to be built prior to storm drainage installation and prior to any building or roadway construction and/or grading. Since these facilities are intended to control increased runoff, they must be fully operational prior to any clearing of the vegetation.

x. In accordance with *Article 11, Minimum Standard and Required Improvements, Section 14(h), Special Provisions*, dry detention facilities shall be located on common grounds within the development; however, detention facilities shall not be considered to be a part of the informal open space area, unless otherwise approved by the Planning Commission. Wet detention/retention facilities also known as lakes may be considered as part of the formal open space/ recreational areas.

xi. Projects developed under these procedures shall establish, in the recorded plat, maintenance and access easements for the detention facilities and include provisions for maintenance in the restrictive covenants or Trust Indentures.

xii. The hydraulic elevations of the drainage system shall not adversely affect adjoining properties.

xiii. All common ground areas, including but not limited to stormwater facilities, recreational spaces and open spaces must be permanently stabilized upon final inspection. Seed and mulch will not be accepted at final inspection.

xiv. Wetland areas shall not be used for the purpose of stormwater detention.

(3) Dry Detention Basins:

i. Dry detention basins provide limited pollutant removal benefits and are not intended for water quality treatment. Detention-only facilities must be used in conjunction with other structural controls that provide stormwater treatment.

ii. Seventy-five (75) acres is the maximum contributing drainage area to be served by a single dry detention basin. Routing calculations must be used to demonstrate that the storage volume is adequate.

iii. Vegetated embankments shall be no more than twenty (20) feet in height and shall have a maximum side slope of a three to one (3:1) ratio. Riprap protected embankments shall have a maximum slope of a two to one (2:1) ratio. Geotechnical slope stability analysis is required for embankments greater than ten (10) feet in height. The detention basin shall be setback such that the outfall is at least twenty-five (25) feet from the property line.

iv. Areas above the normal high water elevations of the detention facility should be sloped toward the basin to allow drainage and to prevent standing water.

v. Inflow channels shall be stabilized with flared riprap aprons, or the equivalent thereof. A sediment forebay sized to 0.1 (one tenth) inches per impervious acre of contributing drainage shall be provided for dry detention basins that are part of the treatment process.

vi. The outlet structure shall be sized based on hydrologic routing calculations and may consist of a weir, orifice, outlet pipe, combination outlet, or other acceptable control structure which would achieve the required graduated discharge.

vii. Riprap, plunge pools or pads, or other energy dissipaters must be placed at the end of the outlet to prevent scouring and erosion.

viii. An emergency spillway shall be included in the stormwater pond design to safely pass the extreme flood flow. The spillway must prevent pond water levels from overtopping the embankment and causing structural damage. A minimum of one foot of freeboard must be provided, measured from the top of the water surface elevation for the extreme flood, to the lowest point of the dam embankment not counting the emergency spillway. Special consideration for smaller basins may be considered as long as the design engineer can show that the practice is warranted.

(4) Stormwater Ponds:

i. Stormwater ponds also known as wet ponds, retention ponds, and or permanent lakes are constructed stormwater retention basins that have a permanent pool of water throughout the year. Runoff from each rain event shall be detained and treated in the pool through gravitational settling and biological uptake until it is displaced by runoff from the next storm. The permanent pool must protect deposited sediments from re-suspension. Above the permanent pool level, additional temporary storage shall be provided for runoff quantity control. The upper stages of a stormwater pond shall be designed to provide extended detention of the two year, twenty-four (24) hour storm event for downstream channel protection, as well as normal detention of larger storm events.

ii. Channel protection may be achieved by releasing the two (2) year, twenty-four (24) hour storm runoff volume over twenty-four (24) hours. A stormwater pond shall provide the required storage above the permanent pool and meet the specified graduated allowable release. Where required, stormwater ponds shall also be used to provide detention to control the one hundred (100) year storm event. Where this is not required, said pond structure shall be designed to safely pass extreme storm flows.

iii. Minimum setback requirements for stormwater pond facilities:

a. Twenty-five (25) feet from property line to outward toe of berm;

b. One hundred (100) feet from private wells;

c. Fifty (50) feet from a septic system tank/leach field;

d. Five hundred (500) feet from public well.

iv. The stormwater pond shall consist of a permanent pool of water, the overlying zone in which runoff control volumes are stored, and a shallow littoral zone along the edge of the permanent pool that acts as a biological filter. All stormwater pond designs shall include a sediment forebay at the inflow to the

basin to allow heavier sediments to drop out of suspension before the runoff enters the permanent pool. Additional pond design features include an emergency spillway, maintenance access, safety bench, pond buffer and appropriate native landscaping.

v. Proper geometric design shall be implemented to prevent hydraulic short-circuiting. The minimum length-to-width ratio for the permanent pool shape is one and one-half to one (1.5:1), and should ideally be greater than three to one (3:1) to avoid short-circuiting. In addition ponds should be wedge-shaped when possible so that flow enters the pond and gradually spreads out, improving the sedimentation process.

vi. To avoid stratification and anoxic conditions, the maximum depth of the permanent pool shall generally not exceed eight (8) feet. Minimum depth for the pond bottom shall be three (3) feet.

vii. Side slopes to the pond shall not exceed three to one (3:1) without the use of safety precautions. Side slopes to the pond shall not exceed three to one (3:1) if mowing is anticipated. Said should terminate on a safety bench. The safety bench requirement may be waived if slopes are four to one ratio (4:1) or gentler.

viii. The perimeter of all deep pool areas should be surrounded by two benches: safety and aquatic. For larger ponds, the safety bench shall extend approximately fifteen (15) feet outward from the normal water edge to the toe of the pond side slope. The maximum slope of the safety bench should be sixteen to one or six percent (16:1 or 6%). An aquatic bench should extend inward from the normal pool edge, fifteen (15) feet on average, and should have a maximum depth of eighteen (18) inches below the normal pool water surface elevation.

ix. The sediment forebay should consist of a separate cell, formed by an acceptable barrier. The forebay must be sized to contain 0.1 (one tenth) inches per impervious acre of contributing drainage. A fixed vertical sediment depth marker shall be installed in the forebay to measure sediment deposition over time. The bottom of the forebay may be hardened to make sediment removal easier. Inflow channels are to be stabilized with flared riprap aprons, or the equivalent. Exit velocities from the forebay must be non- erosive.

x. Flow control from a stormwater pond is typically accomplished with the use of a concrete or corrugated metal riser and barrel. The riser should be located within the maintenance easement for access, safety and aesthetics. Higher flows should pass through openings or slots protected by trash racks further up on the riser. After entering the riser, flow is conveyed through the barrel and discharged downstream. Anti-seep collars should be installed on the outlet barrel to reduce the potential for pipe failure.

xi. Riprap, plunge pools or pads, or other energy dissipaters must be placed at the end of the outlet to prevent scouring and erosion. If pond daylights to a channel with dry weather flow, care should be taken to minimize tree clearing along the downstream channel, and to re-establish a forested riparian zone in the shortest possible distance.

xii. An emergency spillway shall be included in the stormwater pond design to safely pass the extreme flood flow. The spillway must prevent pond water levels from overtopping the embankment and causing structural damage. A minimum of 1 foot of freeboard must be provided, measured from the top of the water surface elevation for the extreme flood, to the lowest point of the dam embankment not counting the emergency spillway. Special consideration for smaller basins may be considered as long as the design engineer can show that the practice is warranted.

xiii. A maintenance right-of-way or easement must be provided to a pond from a public or private road. Maintenance access should be at least fifteen (15) feet wide, having a maximum slope of no more than fifteen percent (15%) and be appropriately stabilized to withstand maintenance equipment and vehicles. The maintenance access must extend to the forebay, safety bench, riser, and outlet and, to the extent feasible, be designed to allow vehicles to turn around.

xiv. The principal spillway opening should not permit access by small children, and end walls above pipe outfalls greater than forty-eight (48) inches in diameter should be fenced to prevent access. Warning signs should be posted near the pond to prohibit swimming and fishing in the facility.

(5) Other Methods of Stormwater Drainage Detention/Retention:

i. Other methods of detention such as seepage pits, French drains, etc., may be considered. If these methods are proposed, proper documentation of soils data, percolation, geological features, shall be provided for review and consideration.

ii. The use of underground detention shall consist of the following elements designed in accordance with acceptable engineering practices:

a. An outlet structure with emergency release provisions;

b. An emergency spillway;

c. Maintenance access;

d. Maintenance schedule; and

e. Sediment trap on inflow structure.

i. Parking Lot Detention:

a. Detention within parking lots is only permitted within overflow parking areas the maximum depth of said detention shall be eight (8) inches. In no case should the maximum limits extent of ponding be designed closer than twenty (20) feet from a building unless water proof of the building and pedestrian accessibility is properly documented on plans.

b. The minimum freeboard from the maximum ponding elevation to the lowest sill elevation shall be one (1) foot.

(6) Stormwater Management Detention/Retention Control Structures:

i. Detention facilities shall be provided with obvious and effective control structures. Plan view and sections of the structure with adequate detail shall be included in plans.

ii. Sizing the low-flow pipe shall be by inlet control or hydraulic gradient requirements.

iii. Low-flow pipes shall not be smaller than eight (8) inches in diameter to minimize maintenance and operating problems, except in parking lot and roof retention where minimum size of opening shall be designed specifically for each condition.

iv. The overflow opening or spillway shall be designed to accept the total peak runoff of the improved tributary area.

v. Proper engineering judgment shall be exercised in analysis of secondary routing of discharge of greater intensity than the basic design storm in order to avoid economic losses or damage downstream.

(7) Stormwater Management Detention/Retention Discharge Systems:

i. Sizing of the system located below the control structure shall be based upon the total improved peak runoff tributary to the structure with no allowance for detention.

ii. When existing downstream pipe sizing, outside the developers control jurisdiction, is inadequate, an evaluation for under sizing of pipes may be undertaken by the City upon receipt of written request from the engineer specifying the run or runs desired to be undersized.

iii. Requests for under sizing shall be accompanied by plans and profiles of the entire undersized system downstream if less than five hundred (500) feet in length or a minimum of five hundred (500) feet.

iv. When hydraulic gradients of the proposed undersize system affect the performance or capacity of structures maintained by the City, no under-sizing will be allowed.

18-5 VERIFICATION OF ADEQUATE DESIGN, EASEMENTS AND MAINTENANCE

A. Verification of Adequacy:

Analysis of all elements of design shall be performed by the registered professional design engineer. The following outline is provided to ascertain that critical elements of design are in workable compliance with the aims of design:

(1) Volume of retention for the total project;

(2) Tributary (Q) peak runoff to basin;

(3) Balanced maximum outflow rate from the low-flow structure;

(4) Ratios of inflow to outflow;

(5) Sizing of the overflow facilities;

(6) Permeability rates, and geotechnical data where applicable;

(7) Stability of dikes;

(8) Safety features; and

(9) Maintenance features.

For projects up to two hundred (200) acres, routing calculations for all ponds shall be submitted in legible tabulated form with documented verification of adequacy according to scope and complexity of design. Proof of adequacy of volume of retention and sizing computations for low-flow structures shall also be submitted and certified by the design engineer. Features of stability and safety may also need to be documented if the scope of the project requires special attention in this area of design.

B. Stormwater Management Detention/Retention Easements:

Two (2) types of easements shall be provided in plans for stormwater detention/retention facilities.

(1) Maintenance Easement:

i. All stormwater management facility reservoirs, with the exception of parking lot and roof detention, shall be enclosed by a maintenance easement. The limits of the said easement shall extend ten (10) feet beyond the top elevation of the reservoir.

ii. When a stormwater management facility is adjacent to a public right-of-way, the limits of the easement shall extend twenty-five (25) feet beyond the elevation of the reservoir on the public right-of-way side.

(2) Drainage Easement:

A minimum fifteen (15) feet wide drainage easement shall be provided within the reservoir area connecting the tributary pipes and the discharge system along the best possible routing of a piping system for possible future elimination of managed stormwater.

C. Maintenance of Stormwater Detention/Retention Facilities and Liability:

(1) All final plats shall have a section that details that the City reserves the right to require the owners of all drainage facilities to perform needed maintenance to prevent potential flooding hazards.

(2) Operation and maintenance of any existing and future stormwater management facility (detention or retention basin) is the responsibility of the property owner(s).

(3) Any liability associated with the design, performance and operation of the facility remains with the owner and the project design engineer. The project design engineer shall be responsible for disclosing information regarding and instructing the owner of required operation and maintenance of the facility(s). Prior to final plat approval by the Planning Commission, a completed *Stormwater Management Indemnification Form* (Appendix) shall be submitted to the City. Said agreement shall require among other things that the landowner, its successors, and, or assigns or any property owner who discharges to or benefits from the maintenance or improvements to the real property shall, annually, inspect the stormwater facility and submit said inspection report to the Environmental Programs Manager or designee of the Building Official. The landowner, its successors, and , or assigns of any property owner within the subdivision who discharges to or benefits from the maintenance or improvement to the real property shall have a Qualified Credential Professional (QCP) inspect the facility at least once every three years. Upon completion of the inspection the QCP shall submit to the City of Daphne in report form a copy of said inspection detailing but not limited to the following items: facility as-built engineered floor elevation, existing floor elevation, sedimentation, vegetative cover, debris, fencing (if required), outlet structure and inlets. The facility shall be subject to at least an annual inspection by the City to ensure that it functions in accordance with its original design criteria and to follow up on submitted inspection and/or respond to citizen complaints. Entry to the stormwater management facility shall be granted by the owner, developer or property owners association.

(4) Any defects discovered by the City during the annual inspection process shall be furnished to the owner of the stormwater management facility in writing by the City. The notice shall be in the form of Certified Mail-Return Receipt Required, through the United States Postal Service. The owner shall have fifteen (15) business days from the date of mailing of said notice by the City to submit a written plan detailing the actions that will be instituted to correct noted defects and thirty (30) business days thereafter to implement a corrective plan. If said repairs involve engineered practices, then the plan shall be signed by an engineer licensed in the State Alabama. Also, if the repair plan results in land disturbance greater than one thousand (1,000 sq. ft.) square feet, a City of Daphne Land Disturbance Permit (Ordinance # 2008-54) shall be required. The City may, at its discretion, allow the owner additional time as deemed appropriate for the corrective work to be performed. Failure by the owner to perform the corrective action may result in enforcement by the City which may include, but not be limited to, the issuance of a Municipal Offense Citation and or the declaration of the facility as a public nuisance.

D. Abatement of Detention/Retention Facility Public Nuisance:

It shall be unlawful for any person to maintain a public or private nuisance upon any public or private property.

(1) Resolution of Abatement:

Whenever any such public nuisance occurs, the City Council may, by resolution, declare the same to be a public nuisance and order its abatement. The resolution shall refer to the street by the name under which it is commonly known, describe the property upon which, or in front of which, the public nuisance exists, by giving a legal description thereof and no other description of the property shall be required. Any number of streets, sidewalks or parcels of property may be included in one and the same resolution.

(2) Notice of Declaration:

i. After the passage of the resolution, notice of a public hearing on the matter shall be given by certified mail, return receipt requested, mailed a minimum of thirty (30) days prior to the date of the public hearing and shall inform the owner of the time, date and place of the public hearing and reason therefore. The notice shall be mailed to the owner of the property as it appears of record in the Baldwin County Revenue Commissioner's office.

ii. Notice shall also be given by publication in a local newspaper of general circulation once a week for two (2) consecutive weeks. The first notice shall be

published at least fourteen (14) days prior to the date of the scheduled public hearing.

iii. In addition thereto, signs shall be conspicuously posted at sixty-foot intervals along the frontage of the property. The caption of the signs shall not be less than one (1) inch in height and shall be in substantially the same form as expressed in the public notice.

iv. The notice shall be posted at least seven (7) days prior to the time of the hearing of the City Council.

(3) Hearing on Nuisance Declaration:

If objections are filed with the City Clerk's office prior to the time stated in the notice, the City Clerk's office shall hear and consider all evidence, objections and protests regarding the proposed compliance issues. The council may continue the assessment hearing from time to time, as needed. Upon the conclusion of an assessment hearing, the Council, by resolution, shall decide whether a public nuisance exists and, if so, shall order it to be removed or abated with respect to any property or part thereof described. The City Council, by passage of the resolution, shall be deemed to have acquired jurisdiction to proceed and either to perform or have performed the work of removal or abatement with respect to such property or part thereof. The decision of the governing body on the matter shall be deemed final and conclusive.

(4) Order for Abatement:

i. After the Council passes the resolution finding the conditions of the property to be a public nuisance and ordering its abatement, all employees and duly authorized agents of the City are hereby expressly authorized to enter upon private property for that purpose.

ii. The City may, at its option, engage and authorize city employees and/or private contractors, companies, enterprises or individuals to abate and remove the nuisance. The Council, by resolution, shall designate the City employees and/or private contractors, companies, enterprises or individuals who may perform the work.

iii. Any property owner shall have the right to abate any public nuisance at his own expense, providing the same is done prior to the time City employees or agents commence work.

(5) Liability Insurance:

Private contractors engaged by the City in accordance with this article shall be required to provide proof of liability insurance in the amounts routinely required by the City for similar projects and will accept responsibility for any damages to subject lots and surrounding areas which may occur during the cutting/cleaning of subject property. The insurance policy shall contain an endorsement that the same shall not be canceled without giving to the City ten (10) days written notice.

(6) Billing and Collection:

i. The City shall keep an account of the cost of abating each nuisance in front of or on each separate lot or parcel of land where work is completed by it or its employees, or by a duly authorized private contractor, company, enterprise or individual, and shall render a written itemized report to the City Council showing the cost of removing a particular public nuisance; provided that before the report is submitted to the governing body, a copy of the same shall be posted for at least five (5) days prior thereto on or near the chamber door of the City Council, together with a notice of the time when the report shall be submitted to the City Council for confirmation.

ii. Prior to the time fixed for the City Council to receive and consider the report, the administrative appeal process of filing, hearing and ruling upon complaints and objections shall have been completed. Contested assessments shall be appealed to the City Council, at the property owner's request upon filing a timely notice with the City Clerk at least seven (7) days prior to the time fixed by the City Council to receive and consider the report.

iii. The cost of abating such nuisance in front of or upon the various parcels of land mentioned in the report shall constitute a special assessment and as thus made and confirmed shall constitute a lien on the property for the total amount of such assessment along with any administrative costs, respectively. After confirmation of the report, the City shall attempt to collect the lien. If this attempt by the City proves futile, a copy of the lien confirmation report will be turned over to the Baldwin County Revenue Commissioner who, under the "optional method of taxation," is charged with the collection of the City's municipal taxes pursuant to Code of Alabama, Sections 11-51-40 through 11-51-74, (1975). It shall be the duty of the Baldwin County Revenue Commissioner to add the amount of the respective lien to the next regular bill for taxes levied against the respective lots and parcels of land, and thereafter the amounts shall be collected at the same time and in the same manner as ordinary municipal ad valorem taxes are collected and shall be subject to the same penalties and the same procedure under

foreclosure and sale in case of delinquency pursuant to Code of Alabama, Sections 11-51-40 through 11-51-74 (1975).

18-6 EROSION AND SEDIMENT CONTROL

A. Purpose:

During the construction process, soil is most vulnerable to erosion by wind and water. Eroded soil endangers water resources by reducing water quality and causing the siltation of aquatic habitat for fish and other desirable species. Eroded soil also necessitates repair of sewers and ditches, and the dredging of watercourses. In addition, clearing and grading during construction causes the loss of native vegetation necessary for terrestrial and aquatic habitat, and to provide a healthy living environment for the citizens of Daphne.

B. General Requirements:

(1) Construction Best Management Practices Plan (CBMPP) shall be designed by a qualified credentialed professional (QCP as defined in *Article 8, Definition of Terms*) such as a professional engineer.

CBMPP map shall include the following:

i. Identify topography, natural features such as watercourses, waterways, and wetlands and proposed construction areas.

ii. Identify critical areas which are subject to severe erosion and off-site areas which are especially vulnerable to damage from erosion and/or sedimentation. Critical areas shall be identified and shall receive special attention and protection. Critical areas include but are not limited to cut and fill slopes, streams and wetlands.

iii. Erosion and sediment controls used throughout all phases of construction and details of permanent stabilization methods to be used at completion.

iv. Provisions for maintenance of erosion and sediment controls and periodic inspections for effectiveness of controls.

C. Submittal, Review and Approval Procedures:

(1) CBMPP shall be submitted with application material required for Planning Commission review.

(2) No land disturbance shall take place prior to review and approval of the project CBMPP.

D. Modifications to the CBMP Plan:

(1) Major modification, such as relocation of detention facility, to the CBMPP shall be submitted to the Department of Community Development and shall be processed and approved, or disapproved, by the Environmental Programs Manager or designee of the Building Official and the Director of Community Development or his/her designee. Where deemed necessary by the Director of Community Development, approval for such modification may be required upon Planning Commission review.

(2) Minor modifications, such as the addition of additional silt fence, to the CBMPP may be addressed on site as needed to ensure compliance with the provisions outlined.

E. Design Requirements:

Erosion control practices, and sediment control practices, shall meet the design criteria set forth in the most recent version of the Alabama Handbook for Erosion and Sediment Control and shall be adequate to prevent transportation of sediment from the site to the satisfaction of the Environmental Programs Manager or designee of the Building Official.

(1) Clearing and Grading:

i. Clearing and grading of natural resources, such as wetlands, waterways, and watercourses, shall not be permitted, except where in compliance with all other sections of this Land Use and Development Ordinance and as permitted by the United States Army Corps of Engineers, if applicable.

ii. Clearing techniques that retain natural vegetation and natural drainage patterns are strongly encouraged.

iii. Phasing shall be required in accordance with provisions provided in *Article 18, Drainage and Stormwater Management Facilities and Erosion/Sediment Control*, Section 3(g) Phasing and Platting, on all sites seventeen and one half (17.5) acres or greater, with the size of each phase to be no more that seventeen and one half (17.5) acres.

iv. Clearing, except as necessary to establish sediment basin and other sediment control devices, shall not begin until all sediment control devices have been installed.

v. Cut and fill slopes shall be no greater than three to one (3:1), except as approved by the City of Daphne to meet other community or environmental objectives.

F. Erosion Control:

(1) Soils must be stabilized within thirteen (13) days of clearing or inactivity in construction.

(2) If vegetative erosion control methods, such as seeding, have not become established within four (4) weeks, the City of Daphne may require that the site be reseeded, or that a non-vegetative option be employed.

(3) On steep slopes or in drainage ways, special techniques that meet design criteria outlined in the Alabama Handbook shall be used to ensure stabilization.

(4) Soil stockpiles are consider part of the site disturbance and therefore must be temporarily stabilized within thirteen (13) days of clearing or inactivity in construction.

(5) Techniques shall be employed to prevent the blowing of dust or sediment from the site onto adjacent properties.

(6) Appropriate techniques shall be employed to divert upland runoff past disturbed slopes.

G. Sediment Controls:

(1) Sediment controls shall be provided in the form of sediment basins or sediment traps and perimeter controls.

(2) Where possible, sediment basins shall be designed in a manner that allows adaptation to provide long term stormwater management. Permanent stormwater controls can be retrofitted to serve as sediment controls during construction.

(3) Adjacent properties shall be protected by the use of a vegetated buffer strip, in combination with perimeter controls.

H. Waterways and Watercourses:

(1) When a watercourse must be crossed regularly during construction, a temporary stream crossing shall be provided, and an approval obtained from the United States Army Corps of Engineers. The letter of permission or the permit from the USCOE must be submitted to the City prior to issuance of the Site Disturbance Permit.

(2) When in-channel work is conducted, the channel shall be stabilized after work is completed.

(3) All on-site stormwater conveyance channels shall be designed according to the criteria outlined in the Alabama Handbook.

(4) Outlets of all pipes and paved channels shall have adequate stabilization to prevent erosion. Riprap may be required for stabilization if vegetative measures prove to be ineffective at controlling erosion in waterways or watercourses.

I. Construction Site Access:

(1) A stabilized construction access shall be required in order to ensure sediment is not tracked on to public streets.

(2) If sediment tracking occurs on public streets and/or right-of-ways, the contractor will be required to remove accumulated sediments from streets and ditches.

J. ADEM *"303(d)"* Listed Streams:

Any site which discharges directly or indirectly to an ADEM 303(d) Listed Stream segment shall submit an enhanced CBMPP to minimize to the maximum extent practical the release of the listed pollutant to the stream. The enhanced CBMPP shall include enhanced BMPs and other measures which may include but not be limited to a water sampling component of the sites discharge for the 303d listed pollutant.

K. Other Provisions Related to Construction and/or Site Disturbance:

(1) *Burning:* No open burning associated with property clearing is allowed during the months of May through October per State regulations. During certain permissible months, open burning is not allowed unless a smoke curtain or incinerator is used and permitted per the current City of Daphne Fire Code.

(2) *Spill Prevention Control Counter-Measures Plan Requirement*: Sites that store onsite fuel, chemicals or other pollutants shall prepare implement and maintain a Spill Prevention, Control and Countermeasures Plan (SPCCP), as a separate document or as a component of the Erosion and Sediment Control Plan (CBMPP) for the site.

(3) *Washout Areas*: A concrete washout area shall be designated on all sites during installation of drainage structures and in the residential construction phase.

(4) *BMPs*: The placement of BMPs in/on City right-of-way is prohibited unless express written permission is granted by the Director of Public Works or his/her designee.

(5) *Construction Debris*: CBMPP shall include measures to address construction debris during all phases of construction at the site.

(6) *Sanitary Waste*: CBMPP shall include measures to address public health and safety in regards to restroom usage during all phases of construction.

L. Site Inspections:

The owner or contractor shall make daily inspections of all control measures throughout the construction process to ensure the overall effectiveness of the CBMPP; however any permitted site shall be subject to at least the following inspections by the Site Containment Officer and/or Environmental Programs Manager:

(1) Immediately after erosion and sediment controls are in place and prior to commencement of site clearing and grading;

(2) After installation of stormwater detention/retention management facilities;

(3) After clearing and grading has been completed;

(4) After remaining drainage has been installed;

(5) After streets and curb and gutter have been completed; and/or,

(6) Before construction completion.

M. Enforcement of Erosion and Sediment Control Provisions:

(1) The Building Inspections Department and/or Public Works Department (where applicable) shall serve as a line of communication between the permit holder and the City in regard to permit compliance.

(2) The City of Daphne may issue a stop work order and/or suspend or revoke the site disturbance permit where the Site Containment Officer or designee of the Building Official or the Director of Public Works or his/her designee has found the following:

i. Violation(s) of the terms of the permit or site development which may adversely affect the health, welfare, or safety of persons residing or working in the neighborhood.

ii. Site development that is detrimental to the public welfare or injurious to property or improvements in the neighborhood.

(3) Compliance with Erosion Control/Sedimentation Requirements:

i. If compliance cannot be achieved through the normal inspection process, the City may issue a Notice of Violation.

(4) Notice of Violation:

i. General:

Whenever the development is determined to be in non-compliance, the owner shall be notified of the violations and/or deficiencies. Upon notification, the owner shall have forty eight (48) hours to bring the site into compliance. The City may, at its discretion, allow the owner additional time as deemed appropriate for the corrective work to be performed. If the site fails to come into compliance, the owner may be found in violation of the Ordinance and guilty of a misdemeanor. Any person who violates this Ordinance shall, upon conviction thereof, be fined not more than five hundred dollars ($500), and in addition shall pay all costs and expenses involved in the case. Each day during which any violation of any of the provisions of this Ordinance is committed, continued, or permitted shall constitute a separate offense. Nothing herein contained shall prevent the City of Daphne from taking such other lawful actions as are necessary to prevent or remedy any violation.

ii. Sediment Impact Violations:

Whenever the City of Daphne determines that significant sedimentation is occurring as a result of a land disturbing activity, despite application and maintenance of protective practices, the person conducting the land disturbing activity or the person responsible for maintenance will be required to take additional protective action. Furthermore, if it is determined that sedimentation has occurred off site onto right-of-way, in-stream, or into stormwater drainage systems, the sediments shall be removed. The owner, builder, or engineer shall be notified by a certified Notice of Violation.

iii. The Notice of Violation shall detail the non-compliance and shall give the violator fourteen (14) days to submit a restoration plan to the Environmental Programs Manager (EPM). This plan shall include measures to mitigate any offsite sediment and measure including but not limited to stabilization measure for the impacted area. Upon receipt and review of the restoration plan, the Environmental Programs Manager at his or her discretion shall require the plan to be submitted to the Planning Commission, United States Corps of Engineers, and/or the Alabama Department of Environmental Management for further review and approval. Upon approval of the plan by the City and other regulatory agencies the violator shall have thirty (30) days to implement and complete the plan. Upon completion of the plan, the Environmental Programs Manager or his/or her designee shall perform a follow-up inspection. If the site is compliant, then the violation shall be resolved.

iv. Intentional Circumvention of the Drainage, Stormwater Management Facilities and Erosion/Sediment Control provisions:

When an owner, builder or design engineer is found to have intentionally circumvented any provision of *Article 18*, the following steps shall be taken:

a. The owner, builder, or engineer shall be notified of such by a certified Notice of Violation.

b. The Notice of Violation shall detail the non-compliance and shall give the violator fourteen (14) days to submit a corrective action plan to the Director of Community Development for review of the applicable City inspector/complainant.

c. Upon receipt and review of the corrective action plan, Director of Community Development at his/her discretion may require the plan to be submitted to the Planning Commission for further review and approval.

d. Upon approval of the plan the violator will have thirty (30) days to implement and complete the plan.

e. If the completion of the plan requires more than thirty days, the owner, builder, or engineer may formally request by letter a thirty (30) day extension from the Director of Community Development. Once the corrective action is complete, the Director of Community Development designee shall inspect the site for compliance with *Article 18, Drainage, Stormwater Management Facilities and Erosion/Sediment Control provisions*.

f. If the site is compliant then the violation will be resolved. However, if the violation is not resolved during the allotted time the owner, builder, or engineer will be notified by a second (2nd) certified Notice of Violation stating that the Planning Commission shall consider a making a recommendation to City Council that said violator's city business license be revoked for a one year period the owner.

18-7 COMPLETION OF CONSTRUCTION ACTIVITIES, FINAL INSPECTION AND/OR CERTIFICATE OF OCCUPANCY REQUESTS

A. All open channels and ditches shall be permanently vegetated with perennial vegetation upon final inspection. Seed and mulch shall not be accepted. If sod is used on slopes, corners will need to be pinned per the Alabama Handbook.

B. Common areas, such as detention basins shall be permanently stabilized upon final inspection with perennial vegetation. Seed and mulch shall not be accepted.

C. All construction waste and debris, silt fences, hay bales, inlet protection, and other temporary BMPs shall be removed prior to final inspection.

D. All final inspection submissions shall include the following:

(1) Signed set of as-built engineered drawings and an electronic version of the drawings compatible with Arc Info 9.3: Projected Coordinate System: NAD_1983_State Plane_Alabama_West_FIPS_0102_Feet.

(2) Letter of acceptance from the City Site Containment Inspector and/or Environmental Programs Manager, Director of Public Works, Fire Marshall, Daphne Utilities, all applicable public utility providers, and applicable State/Federal agency.

(3) Letter of completion from the project engineer.

(4) Letter of completion from the project landscape architect.

(5) Copy of all recorded drainage or right of entry easements.

(6) Maintenance bonds for streets and drainage, and any other applicable bonds.

ARTICLE XIX
LANDSCAPE STANDARDS AND TREE PROTECTION

19-1 PURPOSE

The intent of this Article is to establish minimum standards for the provision, installation, and maintenance of landscape plantings and tree preservation in order to achieve a healthy, beautiful, and safe community by the following means:

- **Aesthetics:** Improve the appearance of all areas through the incorporation of open space into development in ways that harmonize, enhance, and build the natural environment.
- **Environmental Quality:** Improve environmental quality by recognizing the numerous beneficial effects of landscaping and tree preservation upon the environment.
- **Land Values:** Maintain and increase the value of land by requiring landscaping and tree preservation to be incorporated into development thus becoming itself a valuable capital asset.
- **Human Values:** Provide direct and important physical and psychological benefits to human being through the use of landscaping and tree preservation to reduce noise and glare, to break up the monotony, and soften the harsher aspects of urban development.
- **Preservation of Vegetation:** Preserve existing natural vegetation and the incorporation of native plants, plant communities and ecosystems into landscape design, where possible.
- **Improved Design:** Promote innovative and cost conscious approaches to the design, installation, and maintenance of landscaping, encouraging existing tree preservation, and water and energy conservation.
- **Bio-Retention:** Innovative landscape design techniques may be considered which encourage the use of bio-retention methods, mechanisms and facilities.
- **Improved Administration and Enforcement:** Establish procedures and standards for the administration and enforcement of this Article.

19-2 APPLICABILITY AND USE

(a) Applicability:

The provisions of this Article shall be required for all residential projects involving the construction of two (2) or more dwelling units including apartments, town homes, condominiums, planned unit developments, subdivisions, business, commercial, industrial, and/or institutional structures; all existing structures which increase the gross floor area by thirty (30) percent or more, except a single family residence; construction

of a park, public way, open space, public building or structure; construction of a public utility whether publicly or privately owned; and other uses as required by the Planning Commission.

A golf course which was in existence prior to the enactment of this Ordinance is hereby exempt from the provisions of this Article.

(b) Change in Use or Ownership Provision:

The provisions of this Article shall apply to any project which requires site plan review for minor expansions of commercial or institutional uses, renovations or changes in use that is subject to administrative review and approval by the Director of Community Development. Where a change in: (a) use of property, (b) occupancy, or (c) ownership--regardless of name change to any business, commercial, industrial or institutional development, it shall be the responsibility of the owner to comply with the provisions of this Article and *Article 16, Parking Provisions,* within ninety (90) days from the date in which the change occurred.

19-3 LANDSCAPE STANDARDS

(a) Site Plan Review:

A site plan shall not be approved by the Planning Commission without an acceptable landscape and irrigation plan.

(b) Subdivision Review:

i. A subdivision shall not be approved by the Planning Commission without an acceptable landscape and irrigation plan.

ii. All subdivisions shall require a landscape plan for the common areas of the subdivision: the entrance, detention pond, retention pond, recreational areas and other areas which are deemed appropriate by the Planning Commission.

iii. A tree survey shall not be required for a subdivision over fifty (50) acres; however, a developer/owner shall comply with the protection of significant trees as otherwise provided herein.

(c) Revisions to Landscape Plan:

If proposed construction shall cause changes in the landscape and/or irrigation plan, a revised plan shall be submitted by the project's landscape architect to the Department of Community Development for re-evaluation prior to the installation of plantings. In no case shall the plans be altered unless approved by the Landscape Architect who originally certified the

plans and the Director of Community Development prior to the installation of plantings. Failure to install landscaping in accordance with the landscape plan approved by the Planning Commission or the City of Daphne shall be subject to a penalty of $500 (five hundred dollars). Said penalty shall be paid to the City of Daphne prior to the issuance of a certificate of occupancy or final plat approval.

(d) Issuance of Site Disturbance Permit:

A landscape and irrigation plan shall be submitted with the recommendation of the Director of Community Development and approved by the Planning Commission prior to the issuance of a site disturbance permit as provided in *Article 15, Procedures for Site Plan Review and Article 17, Procedures for Subdivision Review.*

(e) Compliance with Landscape Provisions:

All subject properties, including those owned by the City of Daphne shall comply with the provisions of this Article, except those provided herein.

(f) Certification and Plan Requirements:

Landscape and irrigation plans shall be drawn and stamped by a licensed landscape architect registered in the State of Alabama. All landscape and irrigation plans shall be reviewed and signed by the owner/developer prior to submission to the Department of Community Development. The landscape plan shall be of professional quality and include at least the following:

i. Date, scale, north arrow, title, and names and contact information for property owner(s), developer, and the landscape architect.

ii. Location of existing boundary line dimensions of the building site, existing water sources, significant drainage features, existing and proposed streets or alleys, existing or proposed utility easements on or adjacent to the building site including overhead power lines, rights-of-way, minimum setbacks, locations of proposed parking spaces, and location of existing and/or proposed sidewalks or pedestrian paths.

iii. The location(s) and dimension(s) of the proposed landscaped areas within the parking area(s) and within greenbelt areas including a description of new trees and plant materials to be placed within landscaped area(s). Both common and botanical names shall be included.

iv. An indication using written or graphic information of plans to

protect from damage during construction any existing trees and other vegetation which are proposed to be retained.

v. An indication using written or graphic information of measures to protect tree roots by controlling erosion or sediment loss during construction.

At a minimum, all trees to remain on site and to be credited toward meeting the minimum landscaping requirements shall be protected before and during construction by a six foot (6-ft) chain link fence with a two inch (2") top rail. Said protection fence shall extend to the ground and shall extend ten feet (10-ft) beyond the drip line of the tree so as to encompass the circumference of the tree canopy.

vi. The proposed irrigation plan shall provide 100% (one hundred percent) coverage of the landscaped areas. Said plan shall show the location of the source of water, controller, lateral lines, heads, the location and size of sleeves, and the location and routing of the mainline. All items shall be identified and labeled on the plan. When applicable and practical, drip irrigation system shall be installed.

vii. Location and species of buffer zone vegetation.

viii. A tree survey shall be performed by a credentialed professional certified to perform such service. Said tree survey shall show all trees with an eight (8) inch or greater caliper. This information shall be plotted on a 24 x 36 inch drawing at the same scale as the landscape and civil engineer plans. The drawing is to be used to determine which trees will be retained and/or removed.

ix. The landscape plan shall clearly show what existing trees, shrubbery, and other vegetation will be retained, as well as, what trees, shrubbery, and other vegetation shall be added to complete the final landscaping of the property.

x. Plans shall provide the locations, species, and diameter at breast height (D.B.H) of existing significant trees indicating those to be retained and those to be removed along with written justification for the removal of any significant trees.

xi. Calculation of the trees to be protected and the quantity of credits to be applied to the landscape requirements shall be provided as well as calculations for the protected trees to be removed.

19-4 PROTECTION OF SIGNIFICANT TREES

(a) Except where permitted by the Planning Commission through either the site plan or subdivision review process, significant trees as defined herein are hereby protected under this Article and cannot be cut or intentionally harmed without the express written permission of the designee of the Director of Public Works.

(b) An overstory tree species, except a live oak, is considered protected as a significant heritage tree if it has a twelve (12) inch or greater caliper. Likewise, an understory tree species is considered protected if it has an eight (8) inch or greater caliper.

(c) Live Oak Trees:

i. Any live oak tree ten inches or greater shall be classified as a significant heritage tree and shall be protected. A live oak ten inches or greater in caliper located within the building foot print of a proposed building shall be replaced by other live oaks at least three inches in caliper.

ii. Complete removal of all heritage trees on site shall not be permitted unless approved by the Planning Commission. If approved, developer shall plant replacement trees as noted in *Section 19-7, Planting Requirements.*

iii. Once new heritage trees are established and accounted in a landscape plan approved by the Planning Commission, said trees shall be preserved in perpetuity.

(d) Other trees of significance include Cabbage Palms (Sabal palmettos) and Windmill Palms (Trachycarpus fortunei).

(e) The following trees shall not be considered significant trees: Chinese Tallow tree/Popcorn tree (Sapium sebiferum), Water Oak (Quercus nigra), or Ornamental Laurel (Prunus spp.).

19-5 TREE PROTECTION ZONE

All lands within one hundred (100) feet of the right-of-way of the four-lane U.S. Highway 98, fifty (50) feet of the right-of-way of Main Street, North Main Street, U.S. Highway 90, and all other (nonresidential) city streets including Pollard Road, Whispering Pines Road and County Road 64 are hereby declared to be tree protection zones.

No tree within these zones shall be removed except as provided above in §19-4(a) nor without first presenting justification based on the criteria noted in §19-6(b) below and written approval from the designee of the Director of Public Works or upon Planning Commission approval, as applicable.

19-6 PERMITTING PROCEDURES

(a) Tree Removal-No Permit Required:

Tree removal shall be at the property owner's expense except for the following: (1) trees in the City right-of-way or on city-owned property which are diseased, injured, in danger of falling close to existing structures, creates an unsafe visual clearance, or conflicts with sight distance, the removal of which shall be funded by the City; or (2) trees beneath utility lines which threaten to damage utility lines, of which the removal is the responsibility of the utility company. Said tree removal shall not require permitting.

(b) Tree Removal Permit--Sites Not Subject to Planning Commission Approval:

Any person wishing to remove or relocate a significant tree as defined herein or a tree located within the tree protection zone, shall submit a written application on the prescribed documents to the designee of the Director of Public Works accompanied by a site plan. The following criteria must be established in order for the permit to be issued:

i. The tree shall be located in an area where a structure or improvement is to be placed in accordance with the proposed plan.

ii. The tree shall be diseased, injured, in danger of falling too close to an existing or proposed structure, interferes with existing utility service, creates an unsafe visual clearance, or conflicts with sight distance or with other Ordinances, Articles, or Regulations.

iii. The tree shall be prior to or after construction in violation of federal, state, local laws, or regulations including but not limited to laws and regulations pertaining to government programs for the

financing of the construction.

iv. No understory trees greater than eight (8) inches in diameter or greater caliper or an overstory with a twelve (12) inch or greater caliper shall be removed unless it can be shown that the tree is a safety hazard to pedestrians, property or vehicular traffic, is diseased or weakened by age, storm, fire or other injury, or it is absolutely necessary to construct the proposed improvements without incurring significant additional construction costs, or it is necessary for the installation of solar energy equipment.

v. A permit may be denied if the tree is considered to have aged or grown to an impressive stature for its species or it is considered an integral part of the natural heritage the designee of the Director of Public Works determines there is a reasonable alternative other than the removal of the tree.

vi. The property owner shall agree to plant two (2) replacement trees for each significant tree proposed to be removed. The replacement trees shall be shade or flowering trees and shall be at least two and one half (2 ½) inches or greater in caliper and ten (10) feet in height at planting.

19-7 PLANTING REQUIREMENTS

(a) Trees planted in accordance with this Article shall meet the following criteria:

i. A minimum of four (4) different species shall be planted on each site. Two (2) species shall be overstory (large) trees and two (2) species shall be understory (medium) trees in order to promote species richness.

ii. Large (overstory) trees shall have at least three (3) inches or greater in caliper and ten (10) feet in height at planting.

iii. Medium (understory) trees shall have at least three (3) inches in caliper and eight (8) feet in height at planting.

iv. Multi-stemmed understory trees shall be a minimum of ten (10) feet in height and must have at least three (3) stems; each with a minimum caliper of ¾ (three-forth) inches.

v. Shrubs shall be a minimum of three (3) gallons at planting. Shrubs pruned into tree form variations shall not be credited toward tree planting requirements. These include, but are not limited to the following: Ligustrum, Indian Hawthorn, Tree Yaupon and

Camellia.

vi. Ground cover planting shall be established with pots sized four inches or greater.

vii. All newly planted trees shall be located in a (twelve by six foot) 12’ x 6’ area at least seventy two square feet.

viii. On-site relocated trees may be credited toward these requirements.

ix. Grass shall be composed of solid sod. Seed and mulch shall not be accepted at final inspection.

x. It is recommended that trees be obtained from a licensed source.

xi. Cabbage Palms (Sabal palmettos) and Windmill Palms (Trachycarpus fortunei) shall be planted in triangular clusters of three palms and must be no further than six feet apart from each other. Each palm shall be a minimum of five feet clear trunk (CT) in overall height to be credited.

(b) Tree Replacement Provisions:

The developer shall plant two (2) replacement trees for each significant tree proposed to be removed, except the Live Oak. The replacement trees shall be shade or flowering trees and shall be at least two and one half (2 ½) inches or greater in caliper and ten (10) feet in height at planting. The quantity of Live Oak trees to be replanted after removal shall be calculated by adding the calipers of all live oaks proposed for removal divided by six (measured in inches).

(c) Credits and Calculation Procedures for Existing Significant Protected Trees:

All plans submitted to the Planning Commission shall have an accurate tree survey denoting each tree above eight inches in caliper, its location, elevation and both proper scientific and common name. The landscape plan shall show the placement and species of the number of required new replacement trees. Calculations of trees to be protected and the quantity of credits to be applied shall be provided along with the calculations of trees to be removed and justification of proposed removal.

i. Measurements:

1) Trees which are from 1” to 4.5” (one to four and one-half inches) in caliper shall be measured 6” (six) inches above the root zone at the base of the tree.

2) Trees which are over 4.5” up to 8” (four and one-half inches up to eight inches) in caliper shall be measured one foot above the root zone.

3) Trees which are greater than 8” (eight inches) in caliper shall be measured 4’ (four feet) above the root zone.

4) All calculations shall be rounded up for a final count.

ii. Tree Credits:

1) Tree credits may only account for preserved trees which can be integrated into the design and calculations for the overall landscape plan.

2) All credited trees shall be at least 8” (eight inches) in caliper measured as provided above.

3) Tree credits shall not apply to trees for frontage areas or parking and impervious materials. These tree credits shall only be applied to those trees which are required for the perimeter tree requirements.

4) One tree credit may be applied for every six inches in total caliper of trees. The credit shall be calculated as follows: sum of calipers of preserved trees divided by six (measured in inches).

5) Existing trees located within a greenbelt area may be credited at a rate of one to one.

6) In addition to the required tree planting requirements, all trees ten inches (10”) in caliper or greater shall be protected if not located within the footprint of the building.

7) If a tree ten inches (10”) or larger is not protected and is either removed or damaged during construction, then two additional trees will be required to be planted for every six inches in caliper of the trees to be removed. Said ten inch caliper tree shall be measured four feet above the root zone at the base of the tree. Calculation: Total tree calipers of trees to be removed divided by six (measured in inches).

8) Cabbage Palms (Sabal palmettos) and Windmill Palms (Trachycarpus fortunei) shall be credited as three (3) palms equal to one (1) three inch (3”) caliper heritage tree if planted in clusters of three as provided above in Section (a).

19-8 GREENBELT ZONES

The term greenbelt zones and greenbelt areas shall be interchangeable within this Ordinance. A greenbelt zone shall be designated on each site to create a natural buffer along the perimeter of proposed development sites. Greenbelt areas shall be landscaped with trees, shrubs, ground cover and grass. Greenbelts may only account for twenty (20) percent of the required landscaping. Sidewalk and/or pedestrian walkway requirements as provided in *Article 11, Minimum Standards and Required Improvements*, shall be considered in the greenbelt design.

(a) Frontage area requirements (front property line or area fronting along roadway) shall apply except where otherwise provided herein.

i. An overstory tree shall be planted for every thirty (30) feet of frontage area. All frontage area trees shall be planted thirty feet from the front property setback and fifty percent of these trees shall be planted ten feet from the front setback.

ii. The first twelve (12) feet of frontage area shall be protected to create a buffer from the road right-of-way.

iii. There shall be a minimum of one three gallon shrub for every five feet of frontage area. The plantings shall be planted within the first twelve feet of the frontage area in the greenbelt.

(b) Perimeter area requirements (side and rear property lines) shall apply except where provided herein.

i. Either overstory or understory trees shall be planted for every fifty (50) feet of the perimeter property lines. Perimeter areas are side and rear property line landscape setbacks.

ii. Side and rear property lines shall have a six (6) feet greenbelt.

(c) U.S. Highway 98 and County Road 13:

All developments along U.S. Highway 98 and County Road 13 shall maintain a minimum of twelve (12) feet of the required fifty (50) foot setback as a landscaped greenbelt along the entire front width of the property, except where curb cuts provide ingress and egress.

If any of the fifty (50) foot front setback is used for parking, said greenbelt shall be in addition to the landscape requirements for parking areas as more specifically defined in Off-Street Parking Facilities, Section 19-10 of this Article. Said greenbelt shall be planted with trees, shrubs, grass, or other ground cover so as to create an attractive appearance representative

of the developer's approved landscape plan.

The trees shall be shade or flowering trees and shall be at least three (3) inches or greater in caliper and ten (10) feet in height at planting. There shall be a minimum of one (1) tree planted for every twenty-five (25) feet or fraction thereof of lot frontage, fifty (50%) percent of which shall be shade trees having a maximum crown of seventy (70) feet, except under or within forty (40) feet of an overhead power line. (*See Definitions, Article 8, Understory Tree*).

(d) U.S. Highway 90 and Alabama State Road 181:

All developments along U.S. Highway 90 and Alabama State Road 181 (south of the intersection of Highway 90 and State Road 181) shall maintain a minimum of twenty (20) feet of the required fifty (50) foot setback as a landscaped greenbelt along the entire front width of the property, except where curb cuts provide ingress and egress.

If any of the fifty (50) foot front setback is used for parking, said greenbelt shall be in addition to the landscape requirements for parking areas as more specifically defined in *Special Designs, Section 19-11* of this Article. Said greenbelt shall be planted with trees, shrubs, grass, or other ground cover so as to create an attractive appearance representative of the developer's approved landscape plan.

The trees shall be shade or flowering trees and shall be at least three (3) inches or greater in caliper and ten (10) feet in height at planting. There shall be a minimum of one (1) tree planted for every twenty-five (25) feet or fraction thereof of lot frontage, fifty (50%) percent of which shall be shade trees having a maximum crown of seventy (70) feet, except under or within forty (40) feet of an overhead power line. (See Definitions, Section 8, Understory Tree).

(e) Multi-Family Developments:

Multi-family developments require greenbelts along all perimeter roadways and all project boundaries. The greenbelt shall not be included as part of the minimum yard requirements. It shall be thirty feet (30') wide along all perimeter roads, and shall be twenty-five 25 feet wide along all remaining project boundaries. The greenbelt shall run the entire length of the project boundaries.

The trees shall be shade or flowering trees and shall be at least three (3) inches or greater in caliper and ten (10) feet in height at planting. There shall be a minimum of one (1) tree planted for every twenty-five (25) feet or fraction thereof of lot frontage, fifty (50%) percent of which shall be shade trees having a maximum crown of seventy (70) feet, except under or

within forty (40) feet of an overhead power line. (*See Definitions, Section 8-2, Understory Tree*).

19-9 BUFFER ZONE REQUIREMENTS

(a) General:

i. Where a business district abuts any part of an existing multi-family residential land use, no buffer shall be required unless deemed appropriate by the Planning Commission.

ii. Any decorative fence design constructed in lieu of a planted buffer must be reviewed and approved by the Planning Commission.

iii. Where a C/I, Commercial/Industrial district abuts any part of a residential district, a natural undisturbed buffer thirty feet (30') in width and an eight (8) foot high privacy fence shall be required, *or* a planted buffer thirty feet (30') in width and an eight (8) foot high privacy fence shall be required.

iv. Where an industrial district abuts any part of a business district, a planted buffer of twenty (20) feet shall be required. A six (6) foot high decorative fence may be constructed in lieu of the planted buffer.

v. Where a business district, B-1, Local Business or B-3, Professional Office, abuts any part of a residential district, a ten (10) foot wide buffer zone shall be required.

vi. Where a B-2, General Business district abuts any part of a residential district, a natural undisturbed buffer fifteen feet (15') in width and an eight (8) foot high privacy fence shall be required, *or* a planted buffer fifteen feet (15') in width and an eight (8) foot high privacy fence shall be required.

vii. Where any non-residential land use (see Special Exceptions in the Table of Permitted Use) is subject to either site plan approval by the Planning Commission, administrative review, or approval of a special exception by the Board of Zoning Adjustment in a residential zone district abutting any part of a residential district, a ten (10) foot wide buffer zone shall be required.

viii. Where any institutional use, multi-family use, multi-use district, or innovative design subdivision abuts any part of a single family zone, the planted buffer zone shall run the entire length of the abutting lot line(s).

(b) Options:

Under no circumstances shall this buffer impair vehicular flow. It shall be part of the yard requirements except where a greenbelt is required. Said protection buffer shall be maintained in such a manner to accomplish its purpose continuously. Zoning districts shall comply with the following minimum standards and said buffer zone shall be constructed of at least (1) one of the following two (2) designs or a combination thereof as recommended by the Director of Community Development and approved by the Planning Commission during site plan review and/or subdivision plat review process.

i. Wall or Fence Options:

1) In a Residential Subdivision or Planned Unit Development

All fences or walls shall be a maximum of six feet in height; shall be located at least six feet from the property line; and shall have a six foot Greenbelt area on both sides of the fence. Shrubs shall be planted every five linear feet of the fencing. Plantings shall be installed in clusters and groupings with trees to soften fence exposure.

2) In a Commercial Development, Multi-Family Apartment and Condominium Project:

All fencing and/or walls located along the primary frontage area providing ingress and/or egress shall not exceed thirty (36) inches in height and shall be located no closer than six feet from the front property line. All fences or walls along other road frontages shall have a maximum height of six feet. Said fence shall be six feet from the property line and shall have a landscaped greenbelt six feet in width on both sides of the fence. Shrubs shall be planted every five linear feet of the fencing. Plantings shall be installed in clusters and groupings with trees to soften fence exposure.

All fences or walls along side and rear property lines shall be a maximum of six feet in height and may be located on the property line. Said fence or wall shall have a six foot wide landscaped greenbelt located on the interior side of the fence.

3) For Retail Car Lot:

All fences or walls along the primary frontage area shall be a maximum of four feet in height and shall be located at least six feet from the property line. Shrubs shall be planted every five linear feet of the fencing. Plantings shall be installed in clusters and groupings with trees to soften fence exposure.

All fences or walls along side and rear property lines shall be a maximum of six feet in height and may be located on the property line. Said fence or wall shall have a six foot wide landscaped greenbelt located on the interior side of the fence.

ii. Natural Forest:

A natural, undisturbed forest which provides a nearly impervious visual barrier due to the dense nature of the plants and/or trees. If this option is chosen, the width of the buffer zone shall be fifty (50) feet and shall be shown on the landscape plan. The Director of Community Development shall determine whether the barrier is satisfactory via site inspection prior to approval.

19-10 OFF-STREET PARKING FACILITIES

The design and appearance of parking areas are intended to be compatible with the character of the community. Toward this objective, the following landscaping standards shall be observed in the construction of off-street parking areas which accommodate six (6) or more parking spaces:

(a) One tree shall be planted for every two thousand (2,000) square feet of impervious area including parking areas and building areas for all development with the exception of a retail car lot. For a retail car lot development, one tree shall be planted for every seventy five hundred (7,500) square feet of impervious surface area.

(b) At least fifteen percent (15%) of the total interior area intended for off-street parking shall be suitably landscaped.

(c) Interior portions of the parking area at intervals of twelve (12) parking spaces shall be broken by provision of landscaped islands. Such landscape islands shall include the placement of shade or flowering trees at least three (3) inches or greater in caliper and ten (10) feet in height at planting.

(d) Each separate landscaped area must be a minimum of ninety (90) square feet if it is to be counted toward the minimum landscaped area requirements.

(e) Landscaped areas shall be protected from vehicular encroachment by the use of curbing or wheel stops.

(f) The owner, tenant and/or agent, if any, shall be jointly and severally responsible for watering and maintaining all landscaping in a healthy, neat and orderly condition, replacing it when necessary, and keeping it free of refuse and debris.

(g) A minimum of six (6) feet side and rear landscaping may be required in

the landscape plan depending on the topography and arrangement of parking facilities.

Such areas shall be planted with a combination of trees, shrubs, and grass or other ground cover adequate to break the expanse of contiguous parking areas and to present an attractive appearance as determined by the Director of Community Development.

(h) Adjacent property owners may jointly agree on the establishment of a common landscaped area between their properties that meets the requirements of this Article and shall be a minimum of ten (10) feet in width; provided that such agreement and the planting and maintenance of the common area shall be binding upon both parties, his/her successors in interest, heirs, and assigns. A signed agreement shall be provided upon submittal of the project review application.

(i) Innovative landscape designs using "natural cluster of trees" rather than the required one (1) tree at intervals of twelve (12) parking spaces may be approved by the Planning Commission if it is determined by the landscape architect that the design is compatible with the character of the community, the intent of this Article and is shown not to be a safety hazard.

(j) Landscaped areas and perimeter areas shall be so graded as to receive a reasonable portion of the rainfall from the surrounding pavement. Protective curbing around landscaped areas will leave openings for the flow of water onto unpaved areas.

(k) No shrub plantings shall be planted closer than four (4) feet from the back of any parking area or curbing. No trees shall be planted closer than three (3) feet from a parking area, back of curb, sidewalk, wall, fence, building or any other hardscape surface.

19-11 SPECIAL DESIGNS

More stringent design and landscape standards may be required by the Planning Commission in any district if it is determined the design would be more compatible with the development and more beneficial to the aesthetics of the City.

19-12 RETENTION OR DETENTION PONDS IN COMMON AREAS

(a) Detention Ponds-General:

Vegetation shall be planted around the circumference of detention areas.

(b) Subdivisions and Planned Unit Developments:

Retention areas shall have embankments planted with a combination of grass (sod) and shrub plantings. Additional requirements for trees may be required as deemed appropriate by the Planning Commission. There shall be a minimum of one shrub for every five (5) feet of circumference around retention or detention areas.

19-13 SUPERVISION

The landscape architect shall be responsible for the supervision of all plantings. Upon completion, the landscape architect shall certify in writing to the Director of Community Development that the submitted, approved landscape plan has been implemented and is in compliance with the provisions of this Article.

19-14 CERTIFICATE OF OCCUPANCY

A certificate of occupancy shall not be issued until the submitted, approved landscape plan has been fully implemented or a financial guarantee for the implementation of the landscape plan is submitted. Said guarantee shall be in an amount equal to one hundred and fifty percent (150%) of the total remaining installation cost. Said cost shall be certified by the landscape architect responsible for the design. In no case shall a certificate of occupancy be approved without the written approval of the design landscape architect.

19-15 MAINTENANCE

Maintenance of new plantings, fencing and/or natural areas is the responsibility of the developer and/or property owner(s). Any vegetation or trees planted or retained to fulfill the requirements of this Article that becomes damaged or diseased must be replaced by the property owner by the beginning of the optimum planting season of the following year and approved by a professional landscape architect. The landscape architect or the property owner must notify the designee of the Director of Public Works in writing when the replacement tree(s) and vegetation has been planted.

19-16 PENALTIES

The Code Enforcement Officer of the City of Daphne shall serve the owner of said property, each person, firm or corporation engaged in the activities regulated hereunder in which the activities are being conducted in violation of any provision of this Article. The person(s) shall be fined upon conviction, not less than twenty-five dollars ($25.00) nor more than five hundred dollars ($500.00) and costs of the court for each offense.

ARTICLE XX
COASTAL PROTECTION

20-1 PURPOSE

The intent of this Article is to simplify the permitting process in the coastal area and promote the protection and enhancement of coastal area resources by adopting provisions which are consistent with or exceed the provisions of the Alabama Coastal Area Management Program.

20-2 STATUTORY AUTHORITY

The legislature of the State of Alabama enacted Title 9, Chapter 7, Sections 10 through 22 of the Code of Alabama, entitled "Preservation, Development, etc. of Coastal Areas," for the protection of those resources and for the enhancement of economic development activities. Title 9, Chapter 7, Section 20 stipulates no agency can issue a permit for any activity in the coastal area that the Alabama Department of Environmental Management finds to be inconsistent with the Coastal Area Management Program established by the Alabama Department of Economic and Community Affairs Office of State Planning and Federal Programs. This Section further stipulates the intent of this Article is to avoid duplication whenever possible as to the managing activities within the coastal area and yet to assure compliance with the management program. Now therefore, the City of Daphne, Alabama, as a means of minimizing duplication of permitting activities within the jurisdiction of Daphne, Alabama does ordain the provisions below as granted under its authority.

20-3 FINDING OF FACT

There is a direct and/or indirect relationship between the protection of coastal area resources, the protection and enhancement of lives and property, the economic stability, and the enhancement activity within the jurisdiction of Daphne, Alabama.

As written, the Alabama Coastal Area Management Program contains specific provisions wherein the City of Daphne can be delegated permitting authority under the Alabama Coastal Area Management Program as a means of minimizing duplication of permitting efforts within the coastal area.

20-4 OBJECTIVES

The objectives of this ordinance are as follows:

(a) To protect humans, wildlife, and natural resources.

(b) To minimize erosion and siltation.

(c) To assist in the implementation of the Alabama Coastal Area Management Program.

20-5 USAGE

Unless specifically defined below, words or phrases used in this shall be interpreted so as to give them the meaning described in the Alabama Coastal Area Management Program as approved on September 28, 1979 and amendments thereto, or otherwise have the meanings in common usage and to give the most reasonable application.

20-6 WORDS AND TERMS DEFINED

(a) Coastal Area:

The coastal waters, including the lands therein and thereunder, and the adjacent shore lands, including the waters therein and thereunder, strongly influenced by each and in proximity to the shorelines of Alabama and including transitional and intertidal areas, salt marshes, wetlands, and beaches within the jurisdiction of Alabama. They extend inland to a point approximately ten (10) feet above mean sea level, and shall include all lands and waters between that point and mean high tide.

(b) Coastal Resources:

Valuable human, natural, cultural or historical assets within the coastal area, such as water quality, air quality, wetlands and submerged grass bed, beaches and dunes, wildlife habitats, biological resources, cultural resources, public access areas, and water resources.

(c) Cultural Resources:

Any district, building, site, object or other material in American history, architecture, archaeology, or culture which is of national, state, or local significance.

(d) Degrade:

To affect the coastal area in such a manner as to produce a continuing reduction of destruction of present levels of coastal resources.

(e) Dredging:

Removal or excavation of any materials from lands underlying coastal waters.

(f) Person:

Any and all persons, natural or artificial, including, but not limited to, any individual, partnership, association, society, joint stock company, firm, company, corporation, institution, trust, estate, other legal entity, business organization, any state or local governmental entity, and any successor of the foregoing.

(g) Substantial Improvement:

(1) Any addition to any structure.

(2) Any extension, enlargement, or expansion of any structure.

(3) Any repair, reconstruction, or improvement of a structure, the cost of which equals or exceeds fifty percent (50%) of the fair market value of the structure either:

(a) Before the repair, reconstruction, or improvement is started or,

(b) If the structure has been damaged and is being restored before the damage occurred.

(h) Steep Slope:

A steep slope is any area of land along a coastal bluff and coastal ravine where the slope exceeds thirty percent (30%).

20-7 LANDS COVERED

This shall apply to all coastal areas in the jurisdiction of Daphne, Alabama.

20-8 BASIS FOR ESTABLISHING THE COASTAL AREA

The coastal area shall be those areas within Daphne, Alabama which lies below an elevation of ten (10) feet above mean sea level, as is defined herein and in the Alabama Coastal Area Management Program.

20-9 PERMIT REQUIRED

A development permit shall be required in conformance with the provisions of this Ordinance.

20-10 COMPLIANCE

No development, activity, or land shall hereafter be initiated, located, extended, converted, or structurally altered without full compliance with the terms of this Ordinance and other applicable regulations.

20-11 ABROGATION AND GREATER RESTRICTIONS

This Ordinance is not intended to repeal, abrogate, or impair any existing easements, covenants, or deed restrictions. However, where this Ordinance and another conflict or overlap, whichever imposes the more stringent restrictions shall prevail.

20-12 INTERPRETATION

In the interpretation and application of this all provisions shall be:

(a) Considered as minimum requirements.
(b) Deemed to neither limit nor repeal any other powers granted under state statutes.

20-13 WARNING AND DISCLAIMER OF LIABILITY

The degree of resource protection and enhancement required by this Ordinance is considered reasonable for regulatory purposes and is based on the requirements of the Alabama Coastal Area Management Program.

20-14 MONITORING AND ENFORCEMENT

Activities permitted under this shall be monitored by the Environmental Programs Manager for compliance with the terms and conditions of the permit issued.

In the event the Environmental Programs Manager or Code Enforcement Officer discovers a violation of this, the Environmental Programs Manager and Building Official may pursue several remedies to the violation.

These are as follows:

(a) Inform the user of the violation and pursue means for correcting the violation.

(b) Issue a cease and desist order if the activity is causing degradation to the coastal area.

(c) Revoke the permit if the activity cannot be brought into compliance with the conditions of the Article.

(d) Pursue judicial remedies and/or levy fines in accordance with the police powers of the City.

(e) Other means as are deemed necessary to prevent further violations of the ordinance.

20-15 ADMINISTRATION

The Environmental Programs Manager is hereby appointed to administer and implement the provisions of this Ordinance and is given the following duties and responsibilities:

(a) Monitor all coastal activities.

(b) Review applications and building permits for activities in the coastal area in accordance with the provisions of this.

(c) Notify the Alabama Historical Commission of archaeological and historical finds.

(d) Where necessary, coordinate with the Alabama Department of Environmental Management and/or other governmental agencies on developments in the coastal area.

(e) Advise the permittee of other state and/or federal permits that may be required.

(f) Maintain a record of permit and monitoring activities.

(g) Issue a public notice of an impending permit, solicit public comments, make the permit application, and related records available to the public for inspection upon request, with the exception of any proprietary information.

20-16 PERMIT PROCEDURES

Application for a development or activity permit shall be made to the Building Inspections Department and shall at a minimum include an erosion control plan consisting of a statement or statements delineating the measures that will be taken to prevent and/or retard erosion from the development or activity site.

20-17 VARIANCE

Any aggrieved person may pursue an appeal in accordance with the variance provisions contained in the Flood Damage and Prevention Ordinance.

20-18 SPECIFIC PROVISIONS

In all areas of the coast the following provisions are required:

(a) Erosion Control Plan:

Any person proposing to conduct a development activity in the coastal area shall submit an erosion control plan to the Building Inspections Department as part of his application for a permit for approval.

(b) Shoreline Erosion Mitigation:

(1) Any use intended to mitigate a shoreline erosion problem in the coastal area shall use nonstructural erosion control methods to the maximum extent practicable, including but not limited to preservation and restoration of dunes, beaches, wetlands, submersed grass beds, shoreline restoration, and nourishment.

(2) The emplacement of groins, jetties and breakwaters as erosion control devices shall be permissible only when no other technically feasible alternative means of control is available and the structure will have to be approved and permitted by the State and Federal Agencies.

The U.S. Department of Army, Corps of Engineers and the Alabama Department of Environmental Management regulate activities in waters of the United States within the political boundaries of the State of Alabama. Joint application and notification, as required by federal and state regulations, shall be submitted to the U.S. Army Corps of Engineers, Mobile District.

Furthermore, the State of Alabama Department of Conservation and Natural Resources State Lands Division regulates the placement and configuration of piers and other improvements on State submerged lands. Notice of intent to impact state owned submerged lands, as required by State Lands Division Regulation 03-SL-01, Rule 220-4-09, shall be submitted to the Alabama Department of Conservation and Natural Resources State Lands Division, Submerged Lands.

A copy of each applicable permit will be required to be submitted to the City prior to installation of the structure.

(3) Protection of Cultural Resources.

(4) All development in the coastal area shall, to the maximum extent practicable, avoid adversely affecting historic, cultural, or archaeological resources.

(5) Any person shall notify the Environmental Programs Manager of any historical, cultural, or archaeological resources discovered in the course of conducting a permitted use in the coastal area.

(6) Coastal permitting may be a prerequisite for site plan and/or subdivision plat approval. Recommendation of the Environmental Programs Manager shall be considered by the Planning Commission in making its final decision on all developments in the Coastal protection area prior to approval.

(c) Protection of Wildlife and Wildlife Habitats:

To the maximum extent practicable, all uses within the coastal area shall be undertaken in such a way as to preserve and protect existing wildlife and wildlife habitats. In particular, endangered species and their habitats, as designated by appropriate federal and state agencies, shall be protected to the maximum extent practicable.

(d) Coastal Bluffs and Coastal Ravines Slope Protection:

New subdivisions and commercial sites shall provide forty (40) foot setback for all steep slopes located within the boundary of the coastal bluffs and coastal ravines. This setback is provided in recognition of the potentially negative impacts of construction in steep slope areas in the form of erosion, siltation, excessive removal of vegetation and soil, flooding, soil slippage, water runoff and destruction of unique land forms. It is further the purpose of this setback requirement to encourage good land use planning and design, maximize optimal use of the natural terrain and maintain ridgelines. Effective and reasonable application of this regulation will protect the health, safety and welfare of the citizens of the City of Daphne, as well as limit the adverse impact on adjoining, downstream properties and Mobile Bay.

ARTICLE XXI
THE BOARD OF ZONING ADJUSTMENT

21-1 AUTHORITY

The Board of Zoning Adjustment is hereby established and the following rules are set forth to govern its operation:

(a) Membership:

The Board shall consist of five (5) members appointed by the City Council for overlapping terms of three (3) years.

(b) Initial Appointment:

The initial appointment shall be as follows: two (2) members for one (1) year; two (2) members for two (2) years; and, one (1) member for three (3) years.

(c) Vacancies:

Any vacancy in the membership shall be filled for the unexpired term in the same manner as the initial appointment. Members shall be removed for cause by the City Council upon written charges and after public hearing thereon.

(d) Public Offices Held:

No members shall hold any other public office or position; with the exception that one (1) of the Board members may also be a member of the Planning Commission.

(e) Rules of Procedure:

The Board shall observe the following procedures:

(1) Shall adopt rules in accordance with the provisions of this Ordinance for the conduct of its affairs.

(2) Shall elect one of its members, other than a member of the Planning Commission, as Chairman, who shall serve for one (1) year or until he/she is re-elected or his/her successor is elected. Said Board will appoint a Recording Secretary.

(3) Said meetings of said Board shall be held at the call of the Chairman and at such other times as said Board may determine.

The Chairman, or in his/her absence, the acting Chairman, may administer oaths and compel the attendance of witnesses by subpoena.

(4) All meetings shall be open to the public and are governed by the Alabama Open Meetings Act 2005- 40, as amended.

(5) Said Board shall keep minutes of its proceedings, show the vote of each member upon questions, if absent or failing to vote, indicating such fact, and shall keep records of its examinations and other official actions, all of which shall be immediately filed in the Office of the City Clerk and shall become public record.

(f) Duties and Powers:

The Board shall have the following duties and powers:

(1) Administrative Appeal:

To hear and decide appeals where it is alleged there is error in any order, requirement, decision, or determination made by the Director of Community Development, Zoning Enforcement Officer, Code Enforcement Officer or other administrative official, involved in the enforcement of this Ordinance.

(2) Special Exceptions:

To hear and decide special exceptions to the terms upon which said Board is required to pass under this Ordinance.

(3) Variances:

To authorize upon appeal in specific cases such variance from the terms of this Ordinance as will not be contrary to the public interest where, owing to special conditions, a literal enforcement of the provisions of this Ordinance will, in an individual case, result in unnecessary hardship, so that the spirit of this Ordinance shall be observed, public safety and welfare secured, and substantial justice served. Such variance may be granted in such individual case of unnecessary hardship upon a finding by the Board that:

(a) There are extraordinary and exceptional conditions pertaining to the particular piece of property in question because of its size, shape, or topography.

(b) The application of this Ordinance to this particular piece of property would create an unnecessary hardship.

(c) Such conditions are peculiar to the particular piece of property involved.

(d) Relief, if granted, would not cause substantial detriment to the public good or impair the purpose and intent of this Ordinance; provided, however, that no variance may be granted for a use of land or building or structure that is prohibited by this Ordinance.

(e) Variance Examples would be as follows:
Allowing smaller yard dimensions because an existing lot of record is of substandard size; waiving a portion of required parking and/or loading space due to some unusual circumstances; or, allowing fencing and/or plant material buffering different from that required, due to some unusual circumstances. This is available only on appeal to the Board of Zoning Adjustment.

(g) Use Variance Not Permitted:

The Board shall not be authorized to approve a use not permitted in a zoning district for which the provision is not otherwise provided herein.

21-2 PROCEDURE

Persons requesting a hearing before the Board of Zoning Adjustment for an administrative review, special exception, or a variance shall observe the following procedures:

(a) An application on the prescribed form shall be filed with the Department of Community Development by said owner of the subject property by the first day of the month for presentation at the next regular meeting, held on the first Thursday of the subsequent month. The application shall include all the specified pertinent data including an explanation of the grounds on which the appeal is being made.

(b) An application shall be accompanied by all supplemental materials listed in the applicable application packet found in Appendix G.

(c) The Board shall hear the appeal within thirty (30) calendar days after its receipt. Public notice of the hearing shall be published in full for one (1) insertion and an additional insertion of a synopsis of the proposed hearing request one (1) week after the first insertion in a newspaper of general circulation published in the municipality, the first insertion shall be at least fifteen (15) calendar days prior to the said public hearing; or, if no newspaper is published in the municipality, then said notice shall be posted in four (4) conspicuous places within the municipality at least fifteen (15) calendar days prior to the said public hearing. Due notice shall be given to the parties in interest of the date, time, and place of said hearing. A sign shall be posted upon properties which by law require public notice.

(d) The Board shall render a decision on any appeal or other matters before it within forty-five (45) calendar days from the date of the public hearing.

(e) An appeal stays all legal proceedings in furtherance of the action appealed from, unless the Director of Community Development certifies to the Board after the notice of appeal shall have been filed with him/her, by reason of facts stated in the certificate a stay would, in his/her opinion, cause an imminent peril to life and property. In such case, proceedings shall not be stayed otherwise than by a restraining order which may be granted by the said Board or a court of record on application, on notice to the official from whom the appeal is taken and on due cause shown.

(f) In exercising the powers granted the Board of Zoning Adjustment in the administrative appeal procedures outline above, said Board may, in conformity with the provisions of this Ordinance, reverse or affirm, wholly or in part, or may modify the order, requirements, decisions, or determination of the Director of Community Development, Zoning Enforcement Officer, Code Enforcement Officer or other administrative

official, involved in the enforcement of this Ordinance.

21-3 LIMITATION, WITHDRAWAL, CITIZEN APPEALS

(a) A property owner, or his/her appointed agent, shall not initiate action for a hearing before the Board relating to the same parcel of land more often than once every twelve (12) months on the same variance request.

(b) Any petition for a hearing before the Board may be withdrawn prior to action thereon by the Board at the discretion of the person initiating such a request upon written notice to the Recording Secretary of the Board.

(c) Any person or persons severally or jointly aggrieved by any decision of the Board may make, within fifteen (15) calendar days thereafter, appeal to the circuit court or the like jurisdiction, by filing with such Board a written notice of appeal specifying the judgment or decision from which appeal is taken.

21-4 FEES

An appeal to the Board of Zoning Adjustment for administrative review, special exception, variance, in addition, the actual costs for legal advertisements of the request and notifications to parties in interest shall be accompanied by the appropriate fee as more specifically enumerated in *Article 34, Schedule of Fees*.

Fees paid for appeals to the Board of Zoning Adjustment in accordance with *Section 21-1, Subsection (f), (1), Administrative Review*, after the Board has acted on an appeal may be returned to the appellant by resolution of the City Council, if the Board has ruled in favor of the appellant, and it is deemed appropriate to do so.

ARTICLE XXII
ZONING AMENDMENT

22-1 PROCEDURE

The City Council may, from time to time, after examination, review and public hearing thereon, amend, supplement or change the regulations and zoning districts herein or subsequently established, proposals for zoning amendments, whether initiated by the City Council, the Planning Commission, or any person, firm, or a corporation, shall be treated in accordance with the following procedure:

(a) An application on the prescribed form shall be submitted in writing to the Department of Community Development thirty (30) calendar days prior to the regularly scheduled meeting and must be accompanied by a complete site plan of the proposed use, an adjacent property owners list, warranty deed (proof of ownership), legal description of subject property, current survey, and a map of the subject property. Such site plan shall include the existing land use and zoning of the adjacent and surrounding properties.

(b) The application shall be reviewed by the Planning Commission at its next regular meeting and said Commission shall have thirty (30) calendar days from said regular meeting within which to submit a recommendation to the City Council. If the Commission fails to submit a recommendation to the City Council within the thirty (30) day period, it shall be deemed to have approved the proposed amendment.

(c) Before the enactment of any amendment to this Ordinance, a public hearing thereon shall be held by the City Council with proper notice as required by law.

(d) Said notice shall be published in full for one (1) insertion and an additional insertion of a synopsis of the proposed amendment one (1) week after the first insertion in a newspaper of general circulation published in the municipality, both insertions shall be at least fifteen (15) calendar days prior to the said public hearing; or, if no newspaper is published in the municipality, then said notice shall be posted in four (4) conspicuous places within the municipality at least fifteen (15) calendar days prior to the said public hearing. Due notice shall also be given to the parties in interest of the date, time and place of said hearing.

(e) Said public hearing shall be held at the earliest possible time to consider the proposed zoning amendment, and the City Council shall take action on said proposed zoning amendment within forty-five (45) calendar days from the date of the public hearing, except in the case where the action of the City Council is not in accordance with the Planning Commission's certified recommendation.

(f) In such case, the City Council shall not make any change or departure from the text or maps, as recommended and certified by the Planning Commission, unless such change or departure is first resubmitted to the Commission for an additional review and further recommendation. The Planning Commission shall have thirty (30) calendar days to resubmit its recommendation to the City Council.

(g) Any petition for zoning amendment may be withdrawn prior to action thereon by the Planning Commission or City Council at the discretion of the owner, authorized representative, firm, or corporation initiating such a request upon written notice to the Department of Community Development or the City Clerk, whichever is applicable.

(h) A property owner, or his authorized representative, shall not initiate action for the same zoning designation affecting the same parcel of land more often than once every twelve (12) months from the date of the action taken by the City Council. The initiation date shall be at such time consideration is given by the Planning Commission.

22-2 REVERSIONARY CLAUSE

(a) General:

(1) Any parcel or parcels of land zoned or rezoned under the amendment authority of this Ordinance shall revert back to the prior zoning classification after the prescribed time period provided in *Section (b) Time Limits* from the date of City Council approval if one of the following has not occurred on site:

a. installation of water mains and connections as shown on approved subdivision or site development plans approved by the Planning Commission; or

b. installation of sanitary sewers and laterals as shown on approved subdivision or site development plans approved by the Planning Commission; or

c. installation of storm sewers, drainage facilities, and drainage structures as shown on approved subdivision or site development plans approved by the Planning Commission.

(2) If the development is to be constructed in stages, one of the above-listed installations shall occur in the first phase of development to preclude reversion of the entire property to the previous zoning classification.

(3) The Planning Commission, upon recommendation of the Director of Community Development, shall recommend to the City Council the reversion period as prescribed below.

(b) Time Limits:

Any recommendation other than as provided below shall be accompanied by a justification thereof. The justification shall be clearly stated in the public hearing and shall be made part of the motion to approve the property's zoning.

TIME LIMITS

ZONING DISTRICT	**2 years**	**3 years**
Single family residential districts	Up to five (5) acres	Over five (5) acres
Multi-family residential-apartment, town house or condominium	Up to one hundred-fifty (150) units	Over one hundred fifty-one (150) units
B-1, B-2, B-3, MU or C/I district	Up to three (3) acres	Over three (3) acres

(c) Administration:

(1) Inspection:

The Director of Community Development shall inspect the site to determine whether development has occurred sixty (60) calendar days prior to the reversion of any property. The Department of Community Development shall notify the property owner as listed in the Baldwin County Tax record (if different from original owner) of an upcoming public hearing regarding reversion of the zoning. Notice shall be provided via certified mail.

(2) Fees:

Extension of reversionary period	$500.00
Advertisement fee	$25.00
Notice to the Public	The greater of $5.75 per letter or United States Postal Cost for Certified Mail

(3) Enforcement and Records:

The Department of Community Development shall maintain files and records to monitor reversion periods.

(4) Penalty:

Failure to request an extension of the reversion period shall result in the re-establishment of the previous zoning of the property.

(5) Zoning Map Disclaimer:

All rezoning or zoning amendment approved after the date of this Ordinance shall be subject to a reversionary period. Please contact the Department of Community Development to verify zoning.

(6) For City Council Ordinance:

A note shall be added to all zoning ordinances:

"This zoning classification is subject to a *(fill in the blank)* year reversionary clause. *(Fill in the blank)* years from the date this ordinance is enacted, if the site development has not started for the purpose listed herein, the zoning shall be null and void and the property shall revert to the prior zoning district. Refer to *Section 22-2, Reversionary Clause*, of the Land Use and Development Ordinance."

(7) Repeal of Ordinance by which Zoning was Established:

Upon expiration of the reversionary period and upon recommendation of the Director of Community Development, the Planning Commission shall forward a recommendation to City Council to repeal the applicable ordinance by which said rezoning was established and to revert said property back to its original zoning classification. Zoning shall remain in place until such time as City Council repeals applicable ordinance. Established procedures for public notice and public hearing for zoning and rezoning shall apply as established in *Article 22, Section 22-1, entitled Procedures subsection (c, d, e)* provided herein.

22-3 FEES

An application to the Planning Commission for rezoning shall be accompanied by the appropriate fee as more specifically enumerated in *Article 34, Schedule of Fees.*

ARTICLE XXIII
ANNEXATION

23-1 PROCEDURE

The City Council may, from time to time, after examination, review and public hearing thereon, amend, supplement or change the regulations and zoning districts herein or subsequently established, proposals for annexation, whether initiated by the City Council, the Planning Commission, or any person, firm, or a corporation, shall be treated in accordance with the following procedure:

(a) An application on the prescribed form shall be submitted in writing to the Department of Community Development thirty (30) calendar days prior to the regularly scheduled meeting of the Planning Commission and must be accompanied by a warranty deed (proof of ownership), legal description of subject property, current survey, and a map of the subject property.

(b) The application shall be reviewed by the Planning Commission at its next regular meeting and said Commission shall have thirty (30) calendar days from said regular meeting within which to submit a recommendation to the City Council. If the Commission fails to submit a recommendation to the City Council within the thirty (30) calendar day period, it shall be deemed to have approved the proposed amendment.

(c) Before enacting any amendment to this Ordinance, a public hearing thereon shall be held by the City Council with proper notice as required by law.

(d) Said notice shall be published in full for one (1) insertion and an additional insertion of a synopsis of the proposed amendment one (1) week after the first insertion in a newspaper of general circulation published in the municipality, both insertions shall be at least fifteen (15) calendar days prior to the said public hearing; or, if no newspaper is published in the municipality, then said notice shall be posted in four (4) conspicuous places within the municipality at least fifteen (15) calendar days prior to the said public hearing. Due notice shall also be given to the parties in interest of the date, time, and place of said hearing.

(e) Said public hearing shall be held at the earliest possible time to consider the proposed annexation, and the Council shall take action on said proposed annexation within forty-five (45) calendar days from the date of the public hearing except in the case where the tentative action is not in accordance with the Planning Commission's certified recommendation.

(f) In such case, the Council shall not make any change in or departure from the text or maps, as recommended and certified by the Planning Commission, unless such change or departure can be first resubmitted to the Commission for an additional review and recommendation. The Commission shall have thirty (30) calendar days to resubmit its recommendation.

(g) Any petition for annexation may be withdrawn prior to action thereon by the Planning Commission or City Council at the discretion of the owner, authorized representative, firm, or corporation initiating such a request upon written notice to the Department of Community Development or the City Clerk's Office, whichever is applicable.

23-2 PROCEDURE FOR ZONING NEWLY ANNEXED LAND

Any land annexed to the City of Daphne hereafter shall be classified as an R-1, Low Density Single Family Residential District unless otherwise recommended by the Planning Commission through the zoning amendment procedure provide in *Article 22-1, Zoning Amendment Procedures*. In such case, City Council may consider, after due process of publication and hearing as required by law, specific applications to zone newly annexed land into one or more existing or proposed new zoning classifications recommended by the Planning Commission. Multiple zoning requests for a single parcel shall be subject to the *Article 17, Subdivision Regulations and/or the Article 30, Planned Unit Development* regulations as applicable.

23-3 FEES

An application to the Planning Commission for annexation shall be accompanied by the appropriate fee as more specifically enumerated in *Article 34, Schedule of Fees*.

ARTICLE XXIV
VACATION OF EASEMENT AND/OR RIGHT-OF-WAY

24-1 PROCEDURE

The City Council may, from time to time, after examination and review thereon, amend, supplement, or change the subdivision requirements in regard to easements and right-of-ways provided herein or subsequently established, whether initiated by the Planning Commission, or any person, firm, or a corporation shall be treated in accordance with the following procedure:

(a) An application on the prescribed form shall be submitted in writing to the Department of Community Development thirty (30) days prior to the regularly scheduled meeting of the Planning Commission and must be accompanied by an adjacent property owners list, warranty deed (proof of ownership), legal description of subject property, current survey, and a map of the subject property.

(b) The application shall be reviewed by the Planning Commission at its next regular meeting.

(c) Said Commission before enacting any amendment to this Ordinance, a public hearing thereon shall be held by the Planning Commission with proper notice as required by law. Due notice shall also be given to the parties in interest of the date, time, and place of said hearing.

Said notice of a vacation of easement or right-of-way shall be published in full for one (1) insertion in a newspaper of general circulation published in the municipality prior to the said public hearing by the City Council.

(d) Said easement or right-of-way shall be vacated and/or relocated upon the recommendation of the Planning Commission and the acceptance by resolution of the City Council.

(e) Any petition for vacation of easement and/or right-of-way may be withdrawn prior to action thereon by the Planning Commission or City Council at the discretion of the owner, authorized representative, firm, or corporation initiating such a request upon written notice to the Planning Coordinator in the Department of Community Development or City Clerk in the City Clerk's Office, whichever is applicable.

24-2 FEES

An application to the Planning Commission for vacation of easement and/or right-of-way shall be accompanied by the appropriate fee as more specifically enumerated in *Article 34, Schedule of Fees.*

ARTICLE XXV

MOBILE HOME PARK PROVISIONS

25-1 GENERAL

(a) Location:

Mobile homes shall not be permitted in any district except an R-5, Mobile Home Residential, district as specified hereafter, and the City Council shall not spot zone individual lots in a zoning district for mobile home use. No extension, expansion, or replacement of an existing mobile home (trailer) park shall be approved, unless it is to be located in an R-5, Mobile Home Residential District.

(b) Buffer Requirement:

Mobile homes not meeting HUD standards (U.S.C. 5401) shall not be installed, erected, or permitted. Where any boundary of a park directly abuts property which is improved with a permanent residential building or unimproved property which may under existing laws and regulations are used for permanent residential construction, a wall or fence of solid appearance shall be six (6) feet in height and of a construction and design approved by the Planning Commission shall be provided along such boundary.

(c) Sale of Lots:

Any subdivision designed for the sale of lots on which homes are to be placed shall conform to all of the requirements set forth in this *Article 17, Subdivision Review*, regardless of whether the homes to be placed on the lots for sale are to be permanent type structures or mobile homes. If it is located in the corporate limits, the land use shall be restricted to those uses permitted in the zoning district in which the proposed subdivision is to occur.

(d) Compliance:

Mobile home parks (trailer parks) designed for rent or lease of spaces within the park for accommodation of individual mobile homes shall conform to the regulations of the Baldwin County Health Department, provided that a copy of the plan for a proposed trailer park, extension, or revised plan of an existing trailer park shall also be submitted to the Planning Commission for approval.

25-2 APPLICATION

(a) An application submitted to the Planning Commission for the use of land as a mobile home subdivision shall be accompanied by a development plan showing compliance with the requirements of this Article prior to construction.

25-3 PLAN

The following information shall be filed with the Department of Community Development:

(a) The initial application shall be in writing, signed by the applicant, and shall include the following:

(1) Location and legal description of area, indicating uses of surrounding areas.

(2) Detailed map of area showing dimensions, contours at two (2) foot intervals, and area drainage.

(3) Plans and arrangements of access streets and connection with traffic artery, lot layout, recreation areas and facilitates, buffer zone, and proposed green belt planting as screening.

(4) Plans for the proposed sewage, drainage, street paving and such other information as may be otherwise required by the Planning Commission.

(5) Plans and specifications of all buildings, improvements, and facilities to be constructed within the mobile home subdivision.

(6) Three (3) copies of the application and all accompanying plans and the requirements of *Article 15, Site Plan Review*.

25-4 MINIMUM REQUIREMENTS

(a) The park shall be located on a well-drained site with a minimum of two (2) acres in size which is properly graded to ensure rapid drainage free from stagnant pools of water.

(b) Each park shall provide mobile home spaces and each such space shall be clearly defined or delineated. Each space shall have an area of not less than four thousand (4,000) square feet and a width of not less than fifty (50) feet.

(c) Mobile home parks which, at the time of the adoption of this Ordinance, existed lawfully with mobile home spaces that do not comply with any of the foregoing minimum area and width or minimum average width requirements, may continue to operate and shall be excused from such compliance.

(d) Maximum density: Ten (10) spaces per residential acre, exclusive of street walks and open space, one (1) per lot or space.

(e) All mobile home spaces shall abut upon a driveway of not less than twenty-four (24) feet in width which shall have unobstructed access to a public street, alley, or highway.

(f) Walkways not less than two (2) feet wide shall be provided from the mobile home spaces to the service buildings.

(g) Each mobile home space shall be provided with two (2) off-street parking spaces.

(h) All driveways and walkways within the park shall be hard-surfaced and lighted at night with electric lamps of not less than 250 watts each, spaced at intervals of not more than one hundred (100) feet.

(i) An electrical outlet supplying at least 100-115/220-250 volts, one hundred (100) amperes shall be provided for each mobile home space.

(j) An adequate supply of pure water for drinking and domestic purposes shall be supplied by pipes to all buildings and mobile home spaces within the park to meet the requirements of the park. Each mobile home space shall be provided with a cold water tap at least four (4) inches above the ground.

(k) Each mobile home space shall be provided with a sewer line at least four (4) inches in diameter which shall be connected to receive the waste from the shower, bathtub, flush toilet, lavatory, and home harbored in such space and having any or all of such facilities. The sewer line in each space shall be connected to discharge the waste into a public sewer system in compliance with any applicable ordinance or into a private sanitary sewer system or individual septic system of such construction and in such a manner as shall comply with the Baldwin County Health Department requirements and present no health hazard.

(l) Garbage cans with tight-fitting covers shall be provided in quantities adequate to permit disposal of all garbage and rubbish, shall be located no further than three hundred (300) feet from any mobile home space, and kept in a sanitary condition at all times. Garbage and rubbish shall be collected and disposed of as frequently as may be necessary to ensure that the cans shall not overflow. The area used to accommodate garbage receptacles shall be properly screened by providing a wall or a fence of solid appearance shall be at least six (6) feet in height and of a construction and design approved by the Planning Commission.

(m) Every park shall be equipped at all times with fire extinguishing equipment in good working order of such type, size, and number and so located within the park as to satisfy applicable reasonable regulations of the fire department. No open fires shall be permitted at any place which may endanger life or property. No fires shall be left unattended at any time.

(n) A six (6) inch water line with a fire plug shall be provided for each thirty (30) mobile homes (e.g., 31 requires two (2) fire hydrants).

(o) No owner or person in charge of any dog, cat, or other pet animal shall permit it to run at large or commit any nuisance within the limits of any mobile home park and shall comply with other applicable local ordinances regarding animals and pets.

(p) It shall be unlawful for any persons including, but without limitation, owners of mobile home parks and owners and/or such occupants of mobile homes within such park to place, maintain, or occupy any mobile home unless such mobile home is equipped with tie-downs and anchors meeting or exceeding standards of the Building Code. Owners of mobile home parks shall notify the Building Official of the placement of any mobile home on his property or the existence of any mobile home in his park which by visual inspection appears not to comply with the tie-down and anchor requirements of the Building Code. Such notification shall be written, shall contain a statement of the nature of the possible violation, the location of the mobile home, name, and the address of the mobile home owner. It shall be the responsibility of the owner of the mobile home park to give written notice to the owners of all mobile homes within such park of the requirements of this Section. In addition to such written notice, the owner of such park shall maintain in a clearly visible location at the entrance to the park, a sign advising all occupants of the park of the requirements of this Article.

(q) Not less than ten (10) percent of the total area of any mobile home park shall be devoted to common recreational areas and facilities, such as playgrounds and swimming pools. Ways for pedestrians and cyclists shall be away from streets, and play areas for small children or other recreational areas in block interiors.

These areas shall not include streets or parking areas, shall be closed to automotive traffic except for maintenance and service vehicles and shall be improved and maintained for the uses intended.

(r) The licensee or permittee, a duly authorized attendant, or caretaker shall be in charge at all times to keep the mobile home park, facilities, and equipment in a clean, orderly and sanitary condition. The attendant or caretaker shall be accountable, with the licensee or permittee, for the violation of any provision of this Ordinance to which the licensee or permittee is subject.

25-5 MINIMUM LOT AND STRUCTURE REQUIREMENTS

The following shall apply:

(a) No lot shall have less frontage on its access street than required for a driveway allowing maneuverability of the home onto the lot. All corners of each lot shall be marked with iron pipe or other permanent type marker.

(b) Mobile homes shall be located on lots with a minimum setback from an access street of twenty-five (25) feet and ten (10) feet from any other lot line, provided no mobile home shall be closer than twenty (20) feet to another mobile home.

(c) Each mobile home space shall be improved with one patio of concrete or other suitable impervious material having a minimum area of one hundred fifty (150) square feet, and one gravel or concrete pad of size equal to or greater than the dimensions of the trailer located on the pad, but in no case less than ten (10) feet by forty (40) feet.

(d) Permanent structures located within any mobile home lot shall be used for storage purposes only, and shall have a maximum area of eighty (80) square feet and shall be located not less than twenty (20) feet from any mobile home, nor closer to any lot lines than provided in the residential district in which it is located.

(e) No permanent additions of any kind shall be built onto, or become a part of any mobile home provided however, that this provision shall not be construed to prohibit the addition to the mobile home of a patio cover or carport cover if the same is not permanently attached to the ground. Such patio or carport covers shall be similar in appearance and design to the mobile home, nor shall this provision be construed to prohibit tie-downs which are required.

25-6 LICENSE

It shall be unlawful for any person to maintain or operate a mobile home park within the corporate limits of the City in any district other than an R-5, Mobile Home Residential, District if the home park was in existence prior to the enactment of this Ordinance the maintenance and/or operation may continue.

25-7 APPLICATION FOR LICENSE

Application for initial mobile home park license shall be filed with the City of Daphne. The application shall be in writing, signed by the applicant and shall include the following:

(a) The name and address of the applicant.

(b) The location and legal description of the mobile home park.

(c) A complete site plan of the mobile home park showing conformity with the requirements of *Article 15, Site Plan Review*.

(d) Plans and specifications of all buildings, improvements and facilities constructed or to be constructed within the mobile home park.

(e) Such further information as may be required by the Planning Commission to enable it to determine if the proposed park will comply with legal requirements. Three (3) copies of the application and all accompanying plans and specifications shall be filed with the Department of Community Development.

(f) Upon application in writing by a licensee for renewal of a license and upon payment of the annual license fee, the City of Daphne shall issue a certificate renewing such license for another year provided the park is still in compliance with the requirements provided herein.

(g) Upon application in writing for transfer of a license and payment of the transfer fee, the City shall issue a transfer if the transferee will sign a document indicating that he/she will comply with all the requirements of this Ordinance and other applicable local, state, and federal laws.

25-8 POSTING OF LICENSE AND TEMPORARY PERMIT

The license or temporary permit shall be conspicuously posted in the office of or on the premises of the mobile home park at all times.

25-9 REVOCATION OF LICENSE

The City of Daphne may revoke any license to maintain and operate when the licensee has been found guilty by a court of competent jurisdiction of violating any provision of this Ordinance. After the correction of such conditions and the payment of the penalties imposed by law and assurance given to the City Council that such condition will not be repeated, then they may issue a new license.

25-10 FEES

The annual license or transfer of license fee for each mobile home park shall be as enumerated in *Article 34, Schedule of Fees.*

ARTICLE XXVI
MANUFACTURED HOMES PROVISIONS

26-1 GENERAL

Manufactured homes not meeting HUD standards (U.S.C. 5401) and not having the HUD Stamp Certification permanently attached shall not be installed, erected, or permitted. A manufactured home which otherwise qualifies as a single family dwelling unit under *Article 8, Definition of Terms*, hereof, shall be allowed to be placed or erected in certain residential zones upon compliance with the following requirements:

(a) A manufactured home may be located within any residential zone other than R-1, Low Density Single Family Residential, and R-2, Medium Density Single Family Residential districts.

(b) A manufactured home shall not be placed within a Planned Unit Development unless placement of manufactured homes within the Planned Unit Development is expressly provided in the Planning Unit Development documents.

(c) The manufactured home shall be reviewed, approved, or disapproved by the Planning Commission as to the compatibility with standards set forth in this Article.

26-2 LICENSE

Contractors doing any and all work required in the siting of a manufactured home shall be licensed by the State prior to receiving a license from the City of Daphne as is the same for erecting other types of structures, prior to the issuance of a Building Permit and a subsequent Certificate of Occupancy as defined in *Article 7, Section 7-2, entitled the Permits and Certificates.*

26-3 COMPLIANCE

(a) Manufactured homes shall be installed according to the standards established either by the Alabama Manufactured Housing Commission Statutory Law, Title 24, Housing Code of Alabama as amended from time to time, the Building Code, and the National Manufacturing Housing Construction and Safety Standards Act of 1974 as amended, U.S.C. 5401.

(b) It is intended that manufactured homes be designed and erected to be similar in appearance to permanent houses - not mobile units - generally with pitched roofs, eaves overhanging six (6) inches or more, and typical to an on-site conventionally built single family permanent dwelling as built in accordance with the Standard Housing Code.

Manufactured homes shall be erected on permanent foundations meeting HUD standards (U.S.C. 5401) or Building Code standards and conforming to Title 24, Housing Code of Alabama, Chapter 535-X-13, as amended, and are deemed to be real property and taxed as such.

(c) Manufactured homes placed in residential zoning districts shall meet the minimum compatibility standards set forth in this Article, are subject to the requirements of the zoning district in which it is placed, except as otherwise provided herein.

26-4 COMPATIBILITY

(a) Placement of a manufactured home may be permitted after it has been reviewed and determined that the manufactured home is compatible with the general appearance of homes in the surrounding area if recommended by the Director of Community Development and approved by the Planning Commission. Manufactured homes shall be compatible to site-built and other homes in the immediate general areas within the same zoning or residential district and/or area. Approval shall be granted upon finding that the manufactured home is substantially similar in size, siding material, roof material, foundation enclosure, and general aesthetic appearance to existing or proposed development in the same zoning district or residential area.

26-5 MINIMUM REQUIREMENTS

The following shall apply:

(a) Minimum width:

The general shape, width, and appearance of the manufactured home shall conform to housing in adjacent or nearby locations to ensure compatibility of site-built houses and manufactured housing.

(b) Roof pitch, overhang, and materials:

The general shape, appearance, and roofing material of the manufactured home shall be compatible with the exterior appearance of the housing in adjacent or nearby locations.

(c) Exterior finish:

Any material may be used for exterior finish that is generally used in areas near the location where the manufactured home is to be sited.

(d) Site orientation:

Manufactured homes shall be placed on the lot in such a manner as to be compatible with and reasonably similar in orientation to the other structures in the area.

(e) Garages, carports, etc:

Garages and/or carports, landings, stairs, porches, entrance platforms, ramps, or other means of entrance for manufactured homes shall be compatible with the manufactured home and site-built garages and/or carports of site-built houses in adjacent or nearby locations and constructed in accordance with the Building Code at the time the manufactured home is sited.

(f) Towing devices:

All towing devices, including but not limited to wheels, axles, hitches and transportation lights must be removed.

(g) Foundation enclosure:

The manufactured home's foundation forms an enclosure under exterior walls, unpierced except for ventilation and access, and conforms to Title 24, Housing Code of Alabama, Chapter 535-X-13, as amended from time to time. The type of material and method used for underpinning shall be consistent with that for site-built houses in adjacent or nearby locations.

ARTICLE XXVII
RECREATIONAL VEHICLE PARK PROVISIONS

27-1 GENERAL

The following regulations apply to all developments provided for the accommodation of transient recreational vehicles including travel trailers, campers, small mobile homes used for vacation purposes, motor homes, and similar transient residential vehicles.

Recreation vehicle parks are uses permitted in R-5, Mobile Home Residential, and B-2, General Business, districts subject to the approval of the Planning Commission and compliance with the requirements of the following provisions.

27-2 MINIMUM REQUIREMENTS

The following shall apply:

(a) No recreational vehicle park shall be located without direct access to a City, County, State, or Federal Highway with a minimum width of not less than fifty (50) feet and shall not direct traffic into adjacent residential districts.

(b) The minimum lot area per park shall be two (2) acres.

(c) Use of spaces in recreation vehicles parks shall be limited to travel trailers, mobile homes, motor homes, and campers.

(d) Users of the spaces shall meet all other applicable laws. Spaces shall be rented by the day or week only and an account of such space shall remain in the same trailer park for a period of not less than ninety (90) days.

(e) Management headquarters, recreational facilities, toilets, showers, laundry facilities and other uses and structures customarily incidental to operation of a recreational vehicle park are permitted as accessory uses in any district which recreation vehicle parks are allowed provided:

(1) Such establishments and the parking area primarily related to their operations shall not occupy more than ten (10) percent of the park area.

(2) Such establishments shall be restricted in their use to occupants of the park.

(3) Such establishments shall present no visible evidence of their

commercial character which would attract customers other than occupants of the park.

(4) No space shall be so located that any part intended for occupancy for sleeping purposes shall be within thirty (30) feet of the right-of-way line of any major, collector or minor street.

(5) Recreational vehicle parks designed for temporary use by mobile homes for recreational or other purposes shall conform to applicable Baldwin County Health Department regulations, provided that the plan for a proposed camp site, extension, or re-plan of an existing camp site shall be submitted to the Planning Commission for approval prior to construction.

ARTICLE XXVIII

FIXED DWELLING PROVISIONS

28-1 MINIMUM PROVISIONS

Duplexes, apartments, townhouses, and mid-rise condominiums are subject to the approval of the Planning Commission and compliance with the following provisions:

(a) There shall be no more than eight (8) continuous dwelling units built in a row with the same front line.

(b) The end of the building in any grouping shall conform to the side yard requirements of the district.

(c) No more than thirty (30) percent of the lot area shall be occupied by buildings.

(d) Insofar as practicable, off-street parking facilities shall be located under habitable floors of the buildings or grouped in bays either adjacent to streets or in the interior of blocks. No off-street parking shall be more than one hundred (100) feet by the most direct pedestrian route from a door of the dwelling unit it intends to serve.

(e) All complexes shall be required to connect to a public or private water and sanitary sewer system operating under the conditions of an NPDES (National Pollutant Discharge Elimination System) permit from ADEM. No other means of waste disposal shall be permitted.

(f) All other requirements within the district in which the apartments, townhouses, or condominiums are located shall prevail.

(g) The total area which may be covered by buildings shall be compatible with the total area requirements of the zoning district in which the development is to occur.

(h) The maximum height of buildings shall be compatible with the maximum building height requirements of the zoning district for which the development is to occur.

(i) Greenbelt areas and landscaping shall be designed in accordance with *Article 19, Landscaping and Tree Protection* provisions except where provided herein.

(j) See *Article 13, District Provisions, Section 8, Fixed Dwellings,* for additional requirements.

ARTICLE XXIX
INNOVATIVE DESIGN PROVISIONS

29-1 GENERAL

The intent of this Article is to provide for single family detached residential developments of an innovative or unconventional design for which the Planning Commission may modify the subdivision regulations, subject to the following restrictions:

(a) Zoning:

The following requirements are not subject to modification by the Planning Commission:

(1) An innovative or unconventional design subdivision shall be allowed only in an R-4, High Density Single and Multi-Family district or R-6(G) Garden or Patio Home District as outlined in *Article 35, Table of Permitted Uses and Conditions*.

(2) The development shall be designed with a wall or fence of a solid appearance at least six (6) feet in height and of a construction and design approved by the Planning Commission shall be provided along such boundary to protect the integrity of the subdivision and of the zoning district in which the development is to occur. Said wall or fence shall conform to applicable provisions as prescribed in *Article 19, Landscaping and Tree Protection.*

(b) Size of Tract:

The tract of land to be used for the innovative or unconventional subdivision shall be of sufficient size to accommodate the proposed uses and buildings in a homogenous and harmonious entity. However, it may not exceed a size greater than ten (10) acres, unless the development of the larger tract of land is approved by the Planning Commission.

(c) Density:

Maximum density shall be five (5) dwelling units per gross acre to be developed. No modification shall be allowed to reduce the aggregate net area of the lots in the subdivision to less than the minimum area required by the zoning district in which the development is to occur, however, a reasonable proportion of the required gross area may be combined with other portions to provide common open area. Such common open space means recreational area for collective use and enjoyment of the residents or occupants of the subdivision or the general public. Common open space shall not include streets, whether public or private, drainage ways, parking, and service areas.

(d) Interior Streets and Sidewalks:

All facilities within an innovative subdivision which are intended for the movement, storage, parking, loading and unloading of vehicles, or pedestrian traffic shall be provided with a permanent surface and of a construction approved by the Planning Commission.

(e) Procedure:

An application for review and approval of an innovative or unconventional design subdivision shall also be subject to the procedures as set forth in *Article 17, Subdivision Review*.

ARTICLE XXX
PLANNED UNIT DEVELOPMENT PROVISIONS

30-1 GENERAL

(a) Intent:

The intent of this Article is to provide an opportunity for the best use of land, protection of valuable natural features in the community, provision of larger areas of recreational open space, more economical public services, and to encourage the unified development of tracts of land by permitting within the confines of an overall density limitation, much more creative, and flexible concepts in planning.

(b) Definition:

A planned unit development is as follows:

Is land under single ownership or unified control, planned and developed as a whole in a single development operation or approved programmed series of development operations, and which generally includes clustered buildings, common open spaces, and a mix of building types and land uses.

Includes principal and accessory uses and structures substantially related to the character of the development itself and the surrounding area of which it is a part.

Is developed according to comprehensive and detailed plans which include not only streets, utilities, lots, or building sites and the like, but also site plans, floor plans, and elevations for all buildings as intended to be located, constructed, used, and related to each other, and detailed plans for other uses and improvements, facilities, and services as will be common use by some or all of the occupants of the planned unit developments, but will not be provided, operated, or maintained at public expense.

30-2 TYPES OF DEVELOPMENTS

(a) Fixed Dwelling Planned Unit Developments:

A group of two (2) or more fixed dwelling structures, together with other permitted uses, on a parcel of property of adequate size that is suitable for the intended use and in single ownership, with not less than sixty (60) feet of frontage on a public street which frontage shall serve as the principal means of access to the property.

(b) Ownership:

A person, partnership or corporation, a property owners' association, legally bound to one another, to carry out the provisions of this Article for the development and operation of a Planned Unit Development, likewise legally bound to execute the agreements as provided hereinafter.

The property owners' association of a condominium project, established under the provisions of Alabama law which has the power to execute the agreements as provided for hereinafter.

30-3 GENERAL REGULATIONS

The following regulations shall apply to all Planned Unit Developments and require that such developments:

(a) Shall be in conformity with the Comprehensive Plan or portion thereof as it may apply.

(b) Shall be consistent in all respects with the purposes and intent of this Ordinance.

(c) Shall advance the general welfare of the City and immediate vicinity.

(d) Shall provide, through desirable arrangement and design, benefits which justify the deviations from development standards which would otherwise apply.

(e) Shall also be reviewed and approved according to the criteria as set forth in *Article 17, Subdivision Review*, if it is determined that the development is a subdivision according to the laws of Alabama.

30-4 DEVELOPMENT REGULATIONS

The following development regulations shall apply to all Planned Unit Developments:

(a) Provisions of residential districts as applicable shall generally be adhered to in all Planned Unit Developments.

(b) All land proposed in the project for residential use, including outdoor use, off-street parking, interior drives, and other circulation ways may be counted in complying with the density requirements.

(c) For any single family, two-family dwelling, any dwelling unit in a townhouse, or condominium building there shall be a private common area. Such common area shall include the space occupied by such dwelling or dwelling unit, with adjoining common area assigned exclusively to such dwelling unit of not less than six hundred (600) square feet in addition to private parking area.

(d) Open Space, Permanent Usable, in Planned Unit Development

Definitions:

- Privately owned and occupied area of a separate lot, outside of any buildings on the lot.

- Privately occupied open space assigned to an individual dwelling unit in a project and not occupied by the dwelling.

- Public open space. Any spaces not occupied by buildings or privately owned lots or privately occupied space. This public open space may consist of access driveways, off-street parking spaces, pedestrian walkways, play areas, landscaped areas and any other areas suitable for the common enjoyment of the residents of the project.

(e) All common areas not assigned to private occupancy as set forth above shall be assigned to the common use of all residents of the development, with such use assured in perpetuity as provided for above. Assignment and development of such common area shall be as follows:

(1) Access driveways.

(2) Landscaped areas, comprising not less than ten (10) percent of all common area required by this Article, may include the following:

(a) Pedestrian access walkways.

(b) Children play areas.

(c) General landscaped areas, flower gardens, and areas for passive recreation.

(d) Swimming pools, including accompanying accessory structures, and areas for organized sports.

(e) Any other areas suitable for the common area enjoyment of the residents.

(f) Every residential structure in a development shall be within two hundred (200) feet of a hard-surfaced access drive no less than twenty (20) feet wide or a parking lot connected with such a drive. In addition, every dwelling or ground floor dwelling unit shall be directly accessible to service and emergency vehicles.

(g) Private streets on common easements may be used to provide vehicular access to not more than thirty (30) dwelling units on any one such drive. In all other respects, the system of vehicular circulation for a development shall be provided by dedicated streets complying in all respects with the standards of the subdivision regulations; the easement therefore may be counted as a part of the net area in complying with density limits, but may not be counted as a part of required landscape or recreation area.

(h) Private streets shall be constructed in accordance with the subdivision regulations. No part of the streets may be used for the parking of vehicles.

(i) Off-street parking spaces for dwelling units may be provided in group garages or parking lots within one hundred fifty (150) feet of the dwelling units to be served. Curb indented parking bays or courts may be permitted within the easement or street right-of-way, but not within the required street or sidewalk. Such parking shall be landscaped and shall be permitted only along easements or streets internal to the project and not along a street or major thoroughfare serving other uses. Such off-street parking spaces may be counted as part of the net area in calculating density, but shall not be counted as part of the required recreation area.

30-5 USES PERMITTED

(a) Principal Uses:

(1) Dwelling units of a permanent nature, for ownership or rental, including non-transient mobile homes.

(2) Public parks and specialized recreation centers.

(b) Accessory Uses:

(1) Home occupations. (See Home Occupation, as defined in *Article 31*).

(2) Facilities for use of residents of the development:

(a) Recreation, children's nursery, kindergarten, laundry or similar services, any similar facility.

(b) Off-street parking lots or garages.

(c) Stores of the "local family shopping" or "convenience" nature provided for the use, primarily, of the residents, in any development comprising three hundred (300) or more dwelling units, with such commercial facilities subject to requirements in the B-1, Local Business, district. Maximum area devoted to such commercial uses shall be one (1) acre or five (5) percent of total acreage in the project, whichever is greater.

30-6 OTHER REQUIREMENTS

(a) Location Requirements:

Each Planned Unit Development shall comply with the following:

(1) Shall be free of objectionable environmental characteristics, such as poor drainage, air pollution, undue noise, unsightliness, and similar problems.

(2) Shall be so located as to assure a maximum of compatibility with other types of development.

(3) Shall be connected to a public or private community water and sanitary sewer facilities. No Planned Unit Development shall be approved without written certification from the appropriate utilities that adequate water and sewer services are available.

(b) Open Space, Site Size, and Density:

Around every principal building, there shall be a minimum required open space, unobstructed by any other building; there shall be a minimum size for projects; there shall be a maximum density. The following rules apply:

(1) Minimum site size:

Adequate for the intended use as determined by the Planning Commission.

(2) Maximum density:

Ten (10) units per acre.

(3) Property line setback:

The minimum setbacks shall be compatible with the minimum setbacks as required in an R-7(A) Apartment District.

(4) Minimum usable open space:

Twenty-five percent (25%).

30-7 REVIEW PROCEDURE

The following shall apply:

(1) The developer should schedule an initial meeting with the Planning Commission.

(2) For the initial meeting, a sketch plan of the proposed project should be furnished by the developer. If, during the initial meeting, it is determined that the project is a subdivision as defined by Alabama law, the developer shall comply with all requirements of the Subdivision Regulations.

(3) If all land in the project is to remain under one ownership, as defined herein, the following points should be discussed with the developer:

(a) The present uses and character of the area.

(b) The road and street system, especially peripheral streets and proposed internal circulation patterns as related to requirements by Planned Unit Developments.

(c) Public and private open areas and parks and trails.

(d) Public utilities and services or their counterpart such as water, sewer, fire protection, surface drainage, school facilities, if any.

(e) Types of structures to be built.

(f) Proposed uses to be developed.

30-8 APPLICATION PROCEDURE

(a) The Sketch Plan:

Upon completion of initial discussions, the developer proposing a planned development should complete an application form requesting initial general review and approval of the project by the Planning Commission.

This stage of review is often called sketch plan stage, although, if he wishes, the developer may submit items from the preliminary plan stage.

All sketches for planned development projects shall be submitted to the Planning Commission for review to ascertain the plan for any project complies with the conditions set forth in this Article and other applicable Sections of this Ordinance.
The following items shall be submitted with the initial application:

(1) A letter of transmittal officially submitting the proposal for development, signed by the developer or his authorized representative. If submitted by someone other than the current owner of the property, the letter should include or be accompanied by satisfactory evidence of the existence of a purchase or lease agreement or other instrument, to ensure the current owner is in agreement with the proposed development.

(2) Three (3) copies of a scaled general site development plan of the proposal showing the following information:

(a) Boundary lines of the property, including dimensions.

(b) Location and names of all public streets adjoining or traversing the site. In the event no public street now adjoins the site, sufficient description by metes and bounds to identify the location of the site.

(c) Identification of the name, plat book, and page number of any recorded subdivision comprising all or part of the site.

(d) Identification and location of any existing easements, water courses, lakes, or other significant natural features upon the site.

(b) The Preliminary Plan:

The developer, after review and discussion of the sketch plan, shall prepare and submit a preliminary plan for review by the Planning Commission.

The purpose of a preliminary plan is to provide an opportunity for somewhat detailed showing of the intent of the developer with regard to compliance with the requirements as outlined in this Article and to provide an initial hearing on the proposal.

The following items shall be submitted with the preliminary plan application:

(1) The preliminary plan shall be received by the Planning Commission and if a rezoning of land will be necessary to accommodate any project, this plan can be used for the public hearing to be held in accordance with Alabama law.

(2) Maps and written statement setting forth the details of the proposed development shall be included in the preliminary plan. The maps must show enough of the area surrounding the proposed development to demonstrate the relationship of the Planned Unit Development to the adjoining uses, both existing and those proposed by the developer.

The facilities are to be identified as public or private. The maps shall be in a general schematic form and contain the following information:

(a) Maps should include the following information:

(1) The approximate topography at two (2) foot intervals.

(2) Proposed land uses and the approximate location of existing and proposed buildings and other structures and uses adjacent to the site.

(3) The character and approximate density of the dwellings.

(4) The approximate location of all streets and rights-of-way, and walkways, and parking facilities.

(5) Public uses including schools, parks, playgrounds and other open spaces.

(6) Number of parking spaces.

(7) Amount of impervious surface.

(8) Generalized drainage plan.

(9) Development staging, if appropriate.

(b) The written statements shall contain an explanation of:

(1) The character of the proposed development and the manner in which it has been designed to take advantage of the Planned Unit Development concept.

(2) The proposed sewage disposal facilities.

(3) Water supply and surface drainage provisions.

(4) Evidence of adequate financial stability to complete the proposed project.

(5) The present ownership of all of the land included within the Planned Unit Development project.

(6) The method proposed to maintain private common open areas, buildings or other facilities, including copies of all legal documents necessary to accomplish this.

(7) The general indication of the expected schedule of development.

(c) If, after a public hearing, the Planned Unit Development project is approved, any rezoning needed shall be instituted subject to revocation and reversion to the original zoning designation of the land, if the final plan is not approved.

(d) In the event approval has been conditioned on modification to the plan, then such preliminary plan approval shall not be effective until the developer has filed written consent to the modifications as required.

(e) If the developer wishes to develop the Planned Unit Development project in stages, the final plan submitted for review and approval may cover only the first stage to be developed, but succeeding stages of the final plan must be in substantial conformance to the approved preliminary plan.

(f) If a final plan covering at least a portion of the area in the approved preliminary plan has not been filed within one (1) year, the preliminary plan approval shall expire.

(c) The Final Plan:

The plan provides a specific and particular plan by which development and construction will take place. The final plan serves as the plan on which the Planning Commission and local government base a decision.

(1) In addition to those items specified for the preliminary plan, the final plan must include:

A map showing:

(a) Street location and nature of improvement.

(b) Lot lines and lot designs.

(c) The landscaping and tree planting plan.

(d) Surface drainage system.

(e) Peripheral setback forty (40) feet.

(f) All easements.

(g) Areas proposed to be conveyed, dedicated, or reserved for parks, parkways, playgrounds, school sites, public buildings and similar public and semi-public uses.

(h) A plot plan for each building site, except single family residential lots and the common area, shall show the approximate location of all buildings, structures, improvements, and indicate the common area surrounding the buildings and structures.

(i) Elevations or perspective drawings of all typical proposed structures and improvements, except single family

residences and their accessory buildings. The drawings need not be in construction detail.

(j) A development schedule indicating:

(1) The approximate date when construction of the project can be expected to begin.

(2) The stages in which the project will be built and the approximate date when construction of each stage can be expected to begin.

(3) The approximate dates when the development of each of the stages in the development will be completed.

(4) The location of common area that will be provided for each phase.

(k) The following plans and diagrams will be provided when the Planning Commission finds that the Planned Unit Development creates special problems of traffic or parking:

(1) An off-street parking and loading area plan.

(2) A circulation diagram indicating the proposed movement of vehicles, goods and pedestrians within the Planned Unit Development and to and from existing thoroughfares.

(3) Any special engineering features and traffic regulation devices needed to facilitate or ensure the safety of this circulation pattern must be shown.

(l) The plan shall be accompanied by written legal documents on behalf of the owner, his heirs, successors, and assigns shall include:

(1) Provisions of the proposed development, as shown on the plans and as set forth in specifications, shall be completed in detail within such time frame as agreed upon by the Planning Commission.

(2) Provisions of all land improvements intended for the common use of all residents, including drives, walks, parking areas, recreation facilities,

equipment, all landscaped or other common areas shall be maintained in perpetuity including such servicing as may be required for the use of such land improvements.

(3) Provisions of no future changes in the development shall be made which would encroach upon the land used to comply with the provisions of this Article as to density, common area, yards, courts, vehicular access, automobile parking, building coverage, or other outdoor requirements.

(4) Provisions of all easements for private drives, utility lines, and similar purposes shall be open at all times for access by publicly employed personnel and equipment for police and fire protection, for inspection of utility systems, and for any other public purpose.

(5) Articles of Incorporation and By-Laws for the formation of a Property Owners' Association for the Planned Unit Development.

(6) A Declaration of Restrictions and Covenants which shall include agreements and provisions to govern the use, maintenance and continued protection of the Planned Unit Development, and all of its common areas. Such declarations shall be consistent with Fannie Mae, Freddie Mac, or other similar Federal or State requirements.

(7) A written legal opinion from the Applicant/Owner's Attorney stating the above legal documents comply with applicable Federal and State Laws.

(d) Final Plan Approval:

The following shall govern approval of a final plan:

(1) The Planning Commission shall compare the final plan with the preliminary plan and with the standards set forth in this Article to assure that the final plan conforms to said standards. The Planning Commission may place conditions upon the granting of approval which, in its judgment, will ensure conformance to the plan as approved.

(2) The approval of the final plan or any stage of it shall be valid for a period of one (1) year following the date of such approval.

(3) Factors to be considered by the administrative staff and the Planning Commission in reviewing any Planned Unit Development are that the development is in harmony with the Comprehensive Plan and with the character of the neighborhood and will provide an overall density and standard of open space as required by this Ordinance.

(4) The final plan or any stage of the Planned Unit Development shall not be approved if the average of the allowable dwelling units per acre, up to and including the stage which is to be approved, exceeds by more than ten percent (10%) of the average number of dwelling units per acre which is allowable for the development.

(5) A report of its findings and recommendations on a proposed Planned Unit Development shall be prepared for and acted on by the Planning Commission. Such report shall constitute a recommendation to the City Council for action should rezoning be necessary.

(6) Upon final approval and after all conditions have been met, the Planning Commission shall approve the recording of the Final Plan in the deed records of the County. When no parcels are to be sold, the developer will process and have recorded the subdivision plat in the manner designated by the Commission.

(e) Substantial Conformance:

The determination of substantial conformance between the preliminary plan and the final plan shall be at the discretion of the Planning Commission.

Slight variation in conformance is intended solely to facilitate the minor adjustments which may be necessary as the plans approach a final construction stage. The Commission may refuse to grant approval of substantial conformance if, in their opinion, the adjustments are being used to significantly modify the approved plan.

(f) Site Improvements:

The developer, at his option, may place street improvements, sidewalks, utilities, and other permanent site improvements after preliminary plan approval or stake the location of the buildings and make application for building permits.

Under no circumstances, however, will any building permit be issued until final approval has been granted and the necessary portions of the final plan recorded. The placing of improvements will not obligate the local government to approve such improvements on the final plan if not in conformance with the terms of this Article.

(g) Public Record:

The final plan is the permanent public record of the Planned Unit Development and will be the manner in which the development is constructed as provided herein.

(h) Contents:

The final plan shall contain, in final form, the information required above. In addition, the following will apply:

(1) If parcels of land are to be sold, a subdivision plat on the forms prescribed by according to the criteria as set forth in *Article 17, Subdivision Review*, and shall be filed for approval in the appropriate manner.

ARTICLE XXXI

HOME OCCUPATIONS, AUTOMOBILE SERVICE STATIONS, CEMETERIES, BED & BREAKFAST ESTABLISHMENTS, EXTENDED STAY HOTEL FACILITIES

31-1 HOME OCCUPATIONS

Home occupations shall be incidental to the residential use of the dwelling and shall not change the essential residential character of the dwelling or adversely affect the uses permitted in the district of which the home occupation is to occur. No home occupation shall be permitted which might interfere with the general welfare of the surrounding residential area due to potential noise, increased pedestrian and vehicular traffic, or any other condition which would constitute an objectionable use of residentially zoned property. Limitations on the type of home occupations are as follows:

(a) Area used shall not exceed twenty percent (20%) of the gross floor area in the principal building.

(b) It shall be confined entirely to the principal building, accessory building, or outside storage building for which twenty percent (20%) of gross floor area would apply.

(c) Employment shall be limited to members of the family residing in the dwelling. There shall be no employment of employees other than members of the resident family. In no case shall more than two (2) persons be engaged in the home occupation.

(d) No internal or external addition, alteration, or remodeling of the dwelling is permitted in connection with the home occupation.

(e) Chemical, mechanical, or electrical equipment that creates odors, light, glare, noises, or interference in radio or television reception detectable outside of the dwelling shall be prohibited.

(f) No display of products shall be visible from the street and only articles made on the premises may be sold; except non-durable articles, consumable products, which are incidental to a service or which service shall be the principal use in the home occupation may be sold on the premises.

(g) Instruction in music, dancing, and similar subjects shall be limited to two (2) students at a time.

(h) The activity carried on as a home occupation shall be limited to the hours between 7:00 a.m. and 10:00 p.m.

(i) One professional or announcement sign may be used to identify the

customary home occupation. Such sign shall not exceed one and one-half (1-1/2) square feet in area exposed to view and must be mounted flat to the main wall of the principal building. No such sign shall be directly illuminated.

(j) The nature of some uses tends to increase beyond the limits permitted for a home occupation and could impair the use and value of a residentially zoned area; therefore, the following shall not be permitted as a customary home occupation:

(1) Uses which do not meet the provision listed above

(2) Automobile body and/or fender repairing

(3) Barber shops and beauty parlors

(4) Food handling on a large-scale basis, processing, or packing

(5) Repair, manufacturing and processing uses; however, this shall not exclude the home occupation of a dressmaker where goods are not manufactured for stock, sale, or distribution

(6) Restaurants

(7) Uses which entail the harboring, training, raising or treatment of dogs, cats, birds, or other animals

(8) Ammunition sales

(9) Acupuncture office and /or practice

(10) Dental offices and /or practice

(11) Gun sales

(12) Medical offices and /or practices

(13) Painting of vehicles

(14) Private schools with organized classes

(15) Small engine repairs

(16) Welding shop

(17) Contractors, provided no commercial trucks which exceed the criteria listed herein, materials or construction equipment are kept on premises. Commercial trailers shall not exceed sixteen (16) feet. Commercial trucks/vehicles shall have no more than six wheels.

(18) Outdoor display or storage of materials, goods, supplies, or equipment used in the operation of the business shall be permitted outside the dwelling

(19) Automobile/truck/boat/vehicle related business is permitted as a home occupation. Vehicle related businesses include but are not exclusive to: vehicle maintenance, repair, renovation, restoration and/or sales

(20) Flammable, caustic or noxious material not commonly found in the home may not be stored or kept on the premises

(k) Customary home occupations may be subject to annual inspection by the Code Enforcement Officer and/or Revenue Officer. The following is a list of permissible home occupations which may be allowed, provided such use meets the criteria and limitations in §31-1 (a-i):

(1) Carpentry, wood working
(2) Child daycare/family daycare in a residential dwelling for no more than 6 children and meet the state requirements
(3) Cleaning services, maid services
(4) Dance /music instruction, tutoring
(5) Dressmaking, tailoring, sewing
(6) Free-lance photography or art studio
(7) Handyman services
(8) Insurance salesman
(9) Landscaping services
(10) Making custom home furnishings
(11) Massage therapist
(12) Mental health specialist, psychoanalysis practice, psychiatry office
(13) Office of religious or church leader
(14) Professional offices: attorney, architect, planner, engineer, accountant, consulting, accounting, book keeping, architect, designer
(15) Screen writer, authors, composers
(16) Speech pathologist
(17) Television repair, computer repair
(18) Therapist
(19) Upholstering
(20) Website designer

(l) All commercial vehicles associated with a home occupation shall be parked on private property, outside of the City right-of-way.

31-2 AUTOMOBILE SERVICE STATIONS

Within the districts permitting automobile service stations, the following requirements shall apply:

(a) Location:

The property on which an automobile service station is located shall not be within one hundred (100) feet of any residential district or any property containing a school, public playground, church, hospital, public library, or an institution for children, elderly, or dependents.

(b) Site Requirements:

An automobile service station shall have a minimum frontage on the primary street of one hundred twenty (120) feet and a minimum lot area of twelve thousand (12,000) square feet. All buildings shall be set back forty (40) feet from all street right-of-way lines, fifty (50) feet for U.S. Highway 98, and all canopies shall be set back fifteen (15) feet from all street right-of-way lines.

(c) Access to Site:

Vehicular entrances or exits at an automobile service station:

(1) Shall not be provided with more than two (2) curb cuts for the first one hundred twenty (120) feet of street frontage or a fraction hereof.

(2) Shall contain an access width along the curb line of the street of not more than forty (40) feet as measured parallel to the street at its narrowest point and shall not be located closer than ten (10) feet to the adjoining property.

(3) Shall not have any two (2) driveways, or curb cuts, any closer than twenty (20) feet at both the right-of-way line and the curb or edge of the pavement along a single street.

(d) Gasoline Pump Islands:

All gasoline pump islands shall be set back at least fifteen (15) feet from the right-of-way line, or where a future widening line has been established, the setback line shall be measured from such line, and where pump islands are constructed perpendicular to the right-of-way line, they shall also be at least fifteen (15) feet from the right-of-way, however, the pumps shall be at least sixty (60) feet from the center line of an arterial street, fifty-five (55) feet from the center line of a collector street and

forty-five (45) feet from the center line of other streets.

(e) Off-Street Parking:

A minimum of two (2) off-street parking spaces are required with an additional off-street parking space for each lubrication or wash bay.

(f) Other Site Improvements:

In addition to the above referenced requirements, the following site improvements shall be adhered to:

(1) A raised curb of at least six (6) inches in height shall be erected along the street property lines, except for driveway openings.

(2) A wall or fence of a solid appearance shall be at least six (6) feet in height and of a construction and design approved by the Planning Commission and/or a staggered double row of Evergreen plantings at least ten (10) feet in width which shall grow to at least ten (10) feet in height at planting and spaced in a manner which after three (3) years will provide an impervious visual barrier. Said protection buffer shall be maintained by the owner of the property in order to conceal such areas or facilities from a residential district adjoining, facing, across a street, in the rear, or on the side of the principal building or use.

(3) Outdoor lighting of all types shall be directed so as to reflect away from all residential dwellings and shall be so situated as not to reflect directly onto a public right-of-way.

(4) Signs, whether permanent or temporary, shall not be placed within the public right-of-way and shall be arranged so they do not obstruct visibility for drivers or pedestrians.

(5) All driving, parking, storage, and service areas shall be paved and curbed and a good stand of grass shall be maintained on the remainder of the lot.

31-3 CEMETERIES

Within districts permitting cemeteries, the following requirements shall apply:

(a) The site proposed for a cemetery shall not interfere with the development of a system of collector or larger streets in the vicinity of such site. In addition, such site shall have direct access to a thoroughfare.

(b) Any new cemetery shall not be located on a site containing less than twenty (20) acres.

(c) All structures shall be set back no less than twenty-five (25) feet from any property line or minor street right-of-way.

(d) All graves or burial lots shall be set back not less than twenty-five (25) feet from any property line or minor street right-of-way line and not less than fifty (50) feet from any collector or arterial street.

(e) The entire cemetery property shall be landscaped and maintained.

(f) An application must be made to the Board of Zoning Adjustment for any extension of an existing cemetery.

31-4 BED & BREAKFAST ESTABLISHMENTS

(a) General:

A bed and breakfast establishment may be permitted in R-1, R-2 or R-3 Single Family zoning designations, subject to the approval of the Board of Zoning Adjustment. All bed and breakfast establishment operators shall abide by the patron registration requirements as set forth in City Ordinance 2008-67 as amended, an Ordinance to Require Hotel Registration and Retention of Registration Records. Bed and breakfasts shall only be permitted in single-family detached dwellings, shall only be operated by the owner and resident of the dwelling, and shall comply with the following provisions:

(b) Definition:

Bed and Breakfast: The renting of rooms in a private residence for brief periods of time together with the provision of breakfast for the guests by the home owner in an establishment having one to five guest rooms which are subordinate and incidental to the main, owner occupied, single family residential use. All service is to be provided by the home owner.

(c) Performance Standards:

Approval of a bed and breakfast establishment may be permitted only upon determination that the application and evidence presented clearly indicate that all of the following standards will be met:

(1) There shall be at least (500) five hundred square feet of interior floor area within the Bed and Breakfast for each guest room it houses. All guest rooms shall be located within the principal structure.

(2) No more than five (5) guest rooms shall be included in any one establishment.

(3) No more than two (2) persons shall be allowed to occupy any one guest room at any time, except in the case where a child less than five (5) years of age occupies the same room. In no case shall any Bed and Breakfast be allowed to exceed its total occupancy limit as established by the City at the time of approval of the use.

(4) Except for serving meals to overnight guests, the establishment shall not engage in the restaurant business. Guest rooms shall not contain cooking facilitates.

(5) Guest stays shall be limited to four weeks.

(6) At least one (1) off-street parking space shall be provided for each guest room, plus two (2) for the owner.

(7) All requirements, standards, and conditions contained herein shall be met.

(d) Bed and Breakfast General Operating Regulations and Requirements:

(1) Length of Stay:

In order to ensure that Bed and Breakfast establishments operate as transient accommodations, rather than as rooming houses, the maximum length of stay shall be limited to thirty (30) consecutive days and guests shall be prohibited from staying at the same Bed and Breakfast establishment for more than sixty (60) days within any one year period.

(2) Limitation on Total Number of Guests per Room/Establishment:

No more than two (2) persons shall be allowed to occupy any one guest room at any time, except in the case where a child occupies the same room. In no case shall any Bed and Breakfast be allowed to exceed its total occupancy limit as established by the City of Daphne at the time of Planning Commission approval.

(3) Parking Requirements:

For each and every guest room as approved by the City of Daphne, there shall be provided one (1) parking space which is in addition to all other required parking spaces. Such additional required parking spaces shall be properly situated on site, shall be properly screened from adjacent properties, and shall be arranged so that each space has direct access to a driveway. Parking areas shall be designed and arranged on the site so as to not detract from the character of the neighborhood. Such parking areas should not detract from the residential character of the neighborhood. Recreational vehicle parking shall be prohibited.

(4) Signs:

Signs should identify the establishment, not advertise it. Therefore, only one (1) non-illuminated wall sign, attached to the front wall of the establishment, shall be allowed. Such signs shall not exceed two (2) square feet in size. The maximum allowable square footage established in each zoning designation and/or overlay district shall apply as provided in each district. Said allowable area shall not be exceeded. In the event that channel letters, as defined in *Article 8, Definitions*, are proposed, then the maximum allowable square footage shall be calculated at a rate of eighty percent (80%) in lieu of the standard rate of one hundred percent (100%).

(5) Food Preparation:

The only meal provided to guests shall be breakfast, and it shall be served only to guests lodging in the facility. Additionally, individual guest rooms shall contain no cooking facilities, and no food preparation or cooking shall be allowed.

(6) Building Design Standards:

(a) Interior:

Only minimal interior modifications shall be allowed whenever it is necessary to meet Building Code or Health Department requirements, and rooms shall not have been specifically constructed or remodeled for rental purposes.

(b) Exterior:

Aside from any alterations necessary to ensure the safety of the structure, no exterior modifications shall be allowed (other than provision of a separate entrance) unless approved by the Planning Commission as a part of the initial approval process. Approved exterior modifications should not detract from the residential character of the structure or the neighborhood.

31-5 EXTENDED STAY HOTEL FACILITIES

An extended stay hotel facility may be permitted in a B-2, General Business, zoning district in accordance with *Article 35, Table of Permitted Uses*. All extended stay hotel facility operators shall abide by the patron registration requirements as set forth in City Ordinance 2008-67 as amended, an Ordinance to Require Hotel Registration and Retention of Registration Records.

(a) Definition:

Extended Stay Hotel Facility. A building or structure under a single management that provides no fewer than five (5) rental room or suite units intended primarily as short term lodging accommodations for public rental on a daily, weekly, or other short term basis for registered guests.

(b) Performance Standards:

An extended stay hotel facility may be permitted by the Planning Commission in accordance with site plan review procedures provided in *Article 15, Procedures for Site Plan Approval.* All extended stay hotel facilities shall provide for and meet the following criteria:

(1) Maintain a central, internal lobby, and provide daily room cleaning and linen changes for its guests.

(2) May include supportive areas such as meeting rooms, incidental retail sales and commercial services, central kitchen facility, dining rooms, restaurants, lounges, office areas, swimming amenities, etc., intended principally as services for registered guests.

(3) Individual room or suite units shall be furnished and may include mini-refrigerators, bars, bar sinks, and microwave ovens, but shall not include more than two (2) bathrooms or more than two (2) bedrooms.

(4) The determination of the number of bedrooms contained in a room or suite unit shall be made based on the suitability of a room or articulated room space, including, without limitation, alcoves and lofts, for use as a defined sleeping area distinct from associated internal living space. The characterization of a room or articulated room space as a bedroom shall be determined objectively on the basis of its physical suitability for use as a distinct defined sleeping area, not on the basis of the manner in which such room or space is denominated.

(5) A building or structure owned under a condominium form of ownership that satisfies this definition of extended stay hotel facility shall be subject to all area and dimensional requirements and limitations applicable to hotels and motels.

(6) No more than six (6) persons per room.

ARTICLE XXXII
TELECOMMUNICATION TOWERS AND FACILITIES PROVISIONS

32-1 PURPOSE

The intent of this Article is to establish minimum standards for wireless telecommunications facilities. The underlying principals of these standards are to:

- Achieve a balance among the number, height, and density of wireless telecommunications facilities that are appropriate for our communities; and,
- Encourage and maximize the use of existing and approved towers, buildings, and other structures to accommodate new wireless telecommunications facilities; and,
- Ensure the compatibility of towers with, and avoid adverse impacts to, nearby properties; and,
- Discourage the proliferation of obsolete towers throughout the City.

32-2 DEFINITIONS

- Accessory structure compound: A fenced, secured enclosure in which a wireless telecommunications facility and its equipment, buildings, access roads, parking area and other accessory devices/auxiliary structures are located.

- Alternative support structure: Any structure other than a wireless telecommunications tower, which may include, but is not limited to, buildings, water towers, light poles, power poles, telephone poles, and other essential public utility structures.

- Antenna: An electromagnetic device which conducts radio signals, through an attached cable or waveguide, to or from a radio transmitter or receiver. Typically this includes “whips,” “cornucopia horns,” “panels,” and parabolic “dishes.”

- Antenna support structure: Any structure on which telecommunications antennas and cabling can be attached. Typically this includes steel towers with guy-wires (guyed towers); wooden, steel or concrete single poles (monopoles); self-supporting steel towers with three or four "legs" (self-supporting/lattice towers); rooftops of existing buildings or structures (such as elevated water storage tanks). *(See Also Tower).*

- Co-location: The placement of more than one wireless communications antenna by one or more telecommunications service providers on a single existing or new antenna support structure.

- Concealment techniques: Design techniques used to blend a wireless telecommunications facility, including any antennas thereon, unobtrusively into the existing surroundings so as to not have the appearance of a wireless telecommunications facility. Such structures shall be considered wireless telecommunications facilities and not spires, belfries, cupolas, or other appurtenances usually required to be placed above the roof level for purposes of applying height such as building bulk, massing, and architectural treatment of both the wireless telecommunications facility and surrounding development. Concealed towers on developed property must be disguised to appear as either a part of the structure housing, a principal use, or an accessory structure which is normally associated with the principal use occupying the property. Concealed towers developed on unimproved property must be disguised to blend in with the existing vegetation. Example: a tower of such design and treated with architectural material so camouflaged to resemble a woody tree with a single trunk and branches on its upper part, also known as a "monopine".

- FAA: Federal Aviation Administration.

- FCC: Federal Communications Commission.

- Height: When referring to a tower or other structure, the distance measured from the ground level at the base of the tower to the highest point on the tower or structure, including if said highest point is an antenna placed on a structure or tower.

- Tower: Any structure that is designed and constructed primarily for the purpose of supporting one or more antenna, including self-supporting lattice towers, guyed towers, or monopole towers. The term includes radio and television transmission towers, microwave towers, common carrier towers, cellular telephone towers, and the like *(See Also Antenna Support Structure).*

32-3 PROCEDURES AND STANDARDS

(a) Permitted Zones:

Wireless telecommunications facilities shall be permitted by special exception in a B-2, General Business, district and by right in a C/I, Commercial/Industrial, district. Antennas located on existing towers (co-location antennas) and antennas located on alternative support structures shall be permitted by right.

(b) Height:
Tower height shall be limited to one hundred and eighty (180) feet, not including the antenna.

Antennas located on alternative support structures shall not exceed fifteen (15) feet in height above the existing structure on which they are placed.

(c) Setbacks:
Where a tower is permitted in a zoning district adjacent to any residential district, the required setback from all residentially zoned property lines shall be a distance equal to the height of the tower.

(d) Co-location:

To minimize adverse visual impact associated with the proliferation and clustering of telecommunication towers, co-location of facilities on existing or new towers shall be encouraged by:

(1) Only issuing permits to Qualified Shared Facilities at locations where it appears there may be more demand for towers than the property can reasonably accommodate; or,

(2) Giving preference to Qualified Shared Facilities over other facilities and authorizing use at particular locations;

(3) For a facility to become a Qualified Shared Facility, the facility owner shall show the following:

(a) The facility is appropriately designed for sharing; and,

(b) The facility owner is prepared to offer adequate space on the facility so others share fair and reasonable nondiscriminatory terms.

(c) Co-location of communications antennas by more than one provider on existing or new telecommunications towers shall take precedence over the construction of a new single-use telecommunications tower.

(d) For any telecommunications tower approved for shared use, the owner of the tower shall provide notice of the location of the telecommunication tower.

(e) No new antenna support structure shall be permitted unless the applicant demonstrates that no existing antenna support structure can accommodate the applicant's needs.

(f) No signage, symbols, or advertisements may be attached to the pole, tower or antenna.

(g) Monopole structures shall have the ability to accommodate at least one (1) additional set of antennas.

(h) Guyed structures and self-supporting towers shall have the ability to accommodate at least two (2) additional sets of antennas.

(e) Aesthetics:

The aesthetic properties of each individual wireless telecommunications facility shall be approved as part of the site plan review process.

(f) Appearance:

The design of the tower shall be of a type that has the least visual impact on the surrounding area.

(1) Towers and antennas shall be painted a neutral or blending color so as to reduce visual obtrusiveness, unless subject to any applicable FAA standards. If an antenna is installed on a structure other than a tower, the antenna and supporting telecommunications facilities must be of a neutral color that is identical to, or closely compatible with, the color of the supporting structure.

(2) No signage, symbols, or advertisements may be attached to the pole, tower, or antenna.

(3) Towers camouflaged to resemble trees or indigenous vegetation in order to blend in with the native landscape shall be subject to

administrative review as are types of concealment techniques. *(See Concealment Techniques).*

(g) Accessory structures:

(1) The design of the compound and its accessory structures shall, to the extent possible, maximize use of building materials, colors, textures, screening, and landscaping that effectively blend the tower facilities within the surrounding natural setting and built environment.

(2) In or adjacent to developed properties, accessory structures must be aesthetically and architecturally compatible with the surrounding environment. Materials such as wood, brick, and stucco should be appropriate. The use of metal or metallic looking materials shall be prohibited.

(h) Non vegetative screening:

(1) Non vegetative screening shall be required unless it is necessary to reduce the visual impact of a wireless telecommunication compound on adjacent public ways, properties, or the neighborhood in which it is located.

In or adjacent to developed properties, non vegetative screening shall be provided in a manner compatible with the surrounding character of development, buildings, natural vegetation, and landscaping.

Such screening, as required and subject to site plan review, shall have a minimum height of eight (8) feet, and may consist of one of the following: brick masonry walls, a fence of a solid appearance, berms, or opaque barriers. All non-vegetative screening shall be properly maintained by the property owner or lessor.

(2) In certain locations where the visual impact of the tower would be minimal, such as remote, agricultural, or rural or heavily developed industrial areas, the non-vegetative screening requirement may be reduced.

(3) Wireless telecommunications facilities utilizing underground vaults rather than above ground equipment buildings may be exempted from screening requirements.

(i) Landscaping:

(1) Landscaping will be required to reduce the visual impact of the compound and its accessory structures on adjacent public ways, properties, or the neighborhood in which it is located. In or adjacent to developed properties, landscaping shall be provided in a manner that is compatible with the surrounding character of development, buildings, and natural vegetation.

(2) The perimeter of the compound shall be landscaped with a buffer of plant materials which effectively screen the view of the compound from adjacent property and public ways. The standard buffer shall consist of a landscape strip of at least five (5) feet in width outside the perimeter of the compound. In locations where the visual impact of the tower would be minimal, the landscaping requirement may be reduced.

(3) A row of trees a minimum of eight (8) feet in height and a maximum of ten (10) feet apart shall be planted around the perimeter of the compound fence. A continuous hedge at least thirty (30) inches in height at planting capable of growing to at least thirty-six (36) inches in height within eighteen (18) months shall be planted in front of the tree line.

(4) All landscaping shall be of the evergreen variety. All landscaping shall be xerophilous (heat tolerant) or irrigated and properly maintained by the property owner or lessor to ensure good health and variety.

(j) Lighting:

(1) Towers shall not be artificially lighted unless required by the FAA or other authority for safety purposes. If lighting is required, "dual lighting," red at night/strobe during day, shall be preferred unless restricted by the FAA.

Lighting must be shielded or directed upward to the greatest extent possible so as to minimize the amount of light that falls onto nearby properties or residential districts.

(2) Basic security lighting for the compound may be permitted, but shall be focused only on the compound itself, and shall be directed away from any adjacent residential districts.

(k) Environmental impact:

All wireless telecommunications facilities shall comply with the National Environmental Policy Act. If an environmental assessment is required by the Federal Communications Commission (FCC), a copy of the assessment, as well as documentation of the FCC's subsequent approval thereof, must be submitted at the time of application.

(l) Safety:

(1) Radio frequency:

The applicant shall be required to submit documentation that the proposed wireless telecommunications facility complies with the FCC standards for radio frequency emissions, as adopted by the FCC on August 1, 1996.

(2) Structural:

A Professional Engineer shall certify that all antenna support structures and wireless telecommunications equipment are erected and/or installed so as to comply with the co-locations requirements of this Ordinance, wind loading and other structural standards contained in the Building Code as adopted by the City of Daphne and the applicable technical codes established by the Electronic Industries Association (EIA/TIA 22-E "Structural Standards for Steel Antenna Towers and Antenna Supporting Structures) or the Telecommunications Industry Association. This shall apply to new and modified structures and facilities.

(3) Security of the site:

Fencing shall be required to ensure that antenna support structures and their accessory buildings are fully secured. Sufficient anti-climbing measures must be incorporated into each facility, as needed, to reduce potential for trespass and injury.

(4) Obsolete towers:

In the event the use of any wireless telecommunications facility has been discontinued for the period of one hundred and eighty (180) calendar days, the wireless telecommunications facility shall be deemed to be abandoned.

The determination of the date of the abandonment shall be made by the Building Official.

Upon such abandonment, the owner/operator of the wireless telecommunications facility shall have an additional one hundred and eighty (180) calendar days within which to reactivate the use of the wireless telecommunications facility to another owner/operator who makes actual use of the wireless telecommunications facility, dismantle, or remove the wireless telecommunications facility.

ARTICLE XXXIII
SIGN PROVISIONS

33-1 PURPOSE

The intent of this Article is to further the purpose stated in Article I and is designed to govern the effective use of signs as a means of communications; to protect and promote the public health, safety and welfare by governing the type, number, location, physical dimensions, setback and other standards to signs in each of the use districts established in this Ordinance; to prevent the disruptions, obstructions and hazards to vehicular and pedestrian traffic that signs may cause; to minimize the possible adverse effect of signs on nearby public and private property; and to encourage a positive visual environment in harmony with the natural beauty of the City of Daphne.

33-2 GENERAL PROVISIONS

The following apply:

(a) General Prohibition:

(1) Signs Prohibited:

No sign, unless herein excepted, shall be erected, constructed, posted, painted, altered, maintained, or relocated, until a permit has been issued by the Code Enforcement Officer. Before any permit shall be issued an application prescribed forms, which shall indemnify and hold harmless the City of Daphne of all damages, all demands or expenses of every character which may in any manner be caused by the erection and use of said sign or sign structure, shall be filed together with drawings and specifications maybe necessary to fully advise and acquaint the Code Enforcement Officer with location, size, construction, materials, manner of illuminating, and securing or fastening, and number of size applied for in the wording of the sign or advertisement to be carried on the sign. A decision by the Code Enforcement Officer shall be made within thirty (30) calendar days from the date of when the application is received. Further, an application for a business license shall be a prerequisite for applying for a sign permit.

(2) Electrical Permit Requirement:

All signs which are electrically illuminated by neon or by any other means shall require a separate electrical permit and inspection. Each sign requiring a permit shall be clearly marked with the permit number and the name of the person or firm placing the sign on the premises. The absence of a proper ID tag shall be prima facie evidence that the sign or advertising structure is being operated in violation of this Ordinance.

(3) Size Restrictions Applicable:

Any permitted sign shall be subject to the size and height limitations imposed by this Ordinance for the district in which said sign is located, except as otherwise provided herein.

(4) Right-of-Way Placement Prohibited:

No outdoor advertising sign or sign structure shall be placed upon any street or highway right-of-way, except as otherwise provided herein.

(5) View Obstruction Prohibited:

No outdoor advertising sign or sign structure shall be located in such a manner as to materially impede the view of any street or highway intersection.

(6) Ingress/ Egress Impediment Prohibited:

No outdoor advertising sign shall be erected, relocated or maintained so as to prevent free ingress/egress from any door, window, or fire escape.

33-3 SPECIAL PROVISIONS

The following apply:

(a) Minimum Height Requirements:

No portion of any outdoor advertising sign shall be less than nine (9) feet above the level of a sidewalk or other pedestrian thoroughfare, nor shall be less than fifteen (15) feet above the level of a public driveway, alley or street.

(b) Aesthetic Standard:

Signs shall be harmonious with the environment and with the nature of our special local characteristics of site, aesthetic tradition, and development potential. Signs made of natural woods and materials, featuring earth tones and indirect external lighting are encouraged to reflect the natural beauty of our mostly residential and recreational area.

(c) Time Requirements:

A sign permit shall be null and void if the sign for which the permit was issued has not been completed and erected within a period of six (6) months from the date of issuance of the permit.

33-4 NONCONFORMING SIGNS

Any sign in existence on the date of adoption of this Ordinance that is not in conformance shall be considered a nonconforming sign and shall be permitted to continue to exist subject to the following conditions and this Section shall also apply to the prohibitions set forth in Section 33-6, Signs Prohibited in All Districts.

(a) Grandfather Clause, Legal Nonconforming Signs:

(1) Existing Off-Premises Signs and Billboards:

At such time as any existing off-premise sign or billboard is removed or destroyed the replacement sign or billboard shall be in conformance with the provisions of this Ordinance. No new off-premise signs or billboards will be permitted in any zone. A permit shall not be issued for any on-premise sign for any premises on which there exists a grandfathered off-premise sign or billboard until the off-premise sign or billboard is permanently removed.

(2) Legal Nonconforming Sign Status:

Any sign located within the corporate limits prior to the enactment of the Land Use and Development Ordinance, September 21, 1987, or located on property prior to its annexation, which does not conform to the provisions as set forth by this ordinance, is eligible. for characterization as a "legal nonconforming" sign and is permitted, provided there is only one (1) ground-mounted, on-premise sign, and all other signage is in conformance with these regulations. A permit for a legal nonconforming sign shall be obtained prior to the date when the next business license is due.

(b) Loss of Legal Nonconforming Status:

A legal nonconforming sign shall immediately lose its legal nonconforming status and must come into conformance upon the following:

(1) Amortization Schedule:

Legally nonconforming signs shall be either removed, replaced with a conforming sign by January 1, 2005 or a date three (3) years from the date in which the property is annexed into the corporate limits.

It is intended that this provision shall ensure that those who hold legally nonconforming status will recoup initial investment costs and remaining useful life of such signs. It is further intended that this provision shall not deprive any owners of property rights without just compensation so as to avoid the occurrence of a taking.

It is envisioned that the time period allotted herein shall allow for amortization and depreciation of such signs based upon the following factors:

Initial investment costs, remaining useful life, length of time of ownership of the premises, the sign thereon, maintenance expenditures, cost of removal, and replacement.

(2) Structural Alteration, Abandonment, Discontinuation, Relocation or Replacement:

If such sign is, after the date of adoption of this ordinance, structurally altered, abandoned, discontinued, relocated or replaced, including the result of an act of God.

(c) Additional Permits Prohibited:

No permits for additional signs shall be issued for any premises on which there are nonconforming signs.

(d) Building Permit Provision:

Wherever a building permit is required for any kind of improvement to a building, structure or land attached to which or on which there exists any nonconforming sign(s), then all signs attached to the building or structure or on the land, shall be replaced with a sign or signs that conform to the requirements of this Ordinance.

(e) Destruction/Structural Deterioration:

If any nonconforming sign is removed or destroyed or becomes fifty percent (50%) or more structurally deteriorated as determined by the Code Enforcement Officer, then the replacement sign shall conform to the requirements of this Ordinance.

(f) Mandatory Compliance:

Any nonconforming sign which is neither grandfathered nor permitted as a "legally nonconforming sign" according to Subsection (a) of this Section and which is prohibited under *Section 33-6, Signs Prohibited in All Districts* of this Ordinance shall be removed or made to conform to this Ordinance within ninety (90) days of the date of adoption of this Ordinance.

(g) Variance:

The Board of Zoning Adjustment may, in special cases and for good reason, and where owing to conditions peculiar to the property and not the result of the actions of the applicant, permit the erection of a sign not in conformance with the requirements of this Article.

The Board, at its discretion, may require the posting of a bond in sufficient amount to protect the City of Daphne against all liabilities that may result from the erection and use of such sign.

33-5 SIGNS FOR WHICH NO PERMIT IS REQUIRED

The following signs may be erected or constructed without a permit but shall comply with the structural and safety requirements of the current building codes and all other applicable provisions of this Ordinance.

(a) Traffic Signs:

Official traffic signs or sign structures, or municipal information signs and provisional warning signs or sign structures, when erected or required to be erected by a governmental agency.

(b) Vehicle Signs:

Any sign on a truck, bus, or other vehicle that is used in the normal course of a business for transportation and not for the sole purpose of advertising, except where a vehicle is offered for sale.

(c) Weather Flags:

Weather flags for providing information on weather conditions: one (1) set for each premises.

(d) Residential Real Estate Signs:

(1) General Provisions:

Real estate signs, temporary in nature, non-illuminated, not exceeding six-and-one-half (6-1/2) square feet in area, advertising real estate for sale or lease or rent, or announcing contemplated improvements of real estate; one (1) sign for each street frontage will be allowed on the site and shall be removed within ten (10) days, upon closing.

(2) Directional Signs:

Directional signs will not be allowed, except as provided below:

"Open House" signs, which identify homes/houses when a selling agent is on the site that are open for the general public to view. Said sign(s) size shall not exceed one-and-one-half (1-1/2) feet in width and three (3) feet in height.

Such signs may be placed at intersections in a manner such that they do not constitute a traffic hazard for a period of one (1) day before the open house and removed the day of the open house, upon closing.

No more than four (4) directional open house signs may be placed in the corporate limits for any one open house and only one (1) route designated by signs to a particular open house and only one (1) sign per company at any one intersection.

(3) Violations:

Any person who fails to remove the sign (s) within the prescribed time period outlined above shall be fined upon conviction, not less than fifty dollars ($50) per sign remaining. Chronic violations may result in the enforcement of *Article 45, Section 45-7, entitled Penalties and Remedies.*

(e) Temporary Promotional Sign Allowance for Commercial and Retail Establishments:

The following signage shall be permitted. That which is not specifically provided herein is expressly prohibited:

(1) Council Authorization Required:

Temporary signs and banners not exceeding fifty (50) square feet in area, temporary decorative flags, tethered inflatable items, bunting, pennants and streamers for recognizing holidays and other occasions authorized by the City Council.

(2) Promotional Weekend and Nationally Recognized Holidays:

On the last Friday of each month, commencing no earlier than six (6) a.m., the following Saturday and Sunday, as well as Monday, if such Monday should coincide with a National holiday (Labor Day, Memorial Day, or the Fourth of July) and/or any other State recognized holiday, retail and commercial establishments duly licensed to do business within the corporate limits shall be permitted to display a reasonable number of three (3) of the following items provided; however, all such items shall be removed from the premises at the close of the final business day of the weekend or at the close of the business day on Monday, should Monday fall on a holiday the requirements outlined above shall apply.

Temporary decorative signs, pennants, banners (not to exceed two (2), twenty (20) square feet each), streamers, bunting, balloons, and flags. (*Reference: Section 33-5, Subsection (g), for provisions governing use of flags).*

Each commercial or retail establishment shall be permitted to choose any three (3) types of signage from the foregoing list on each weekend specified and shall be limited to the use of only those three (3) types of items chosen during any given promotional weekend.

(f) Political Signs:

Political signs shall be displayed for the duration of a campaign and shall be removed within five (5) days following the election. A candidate shall not place signs prior to qualifying to run for office with the qualifying entity administering the election. Such signage shall be subject to the requirements of Ordinance 1989-04, Establishing Sign Control during Political Campaigns. Signs located within residential districts shall not exceed four (4) square feet in area.

(g) Flags:

National flags and flags of political subdivision of the United States and flags of bona fide civic, charitable, fraternal, and welfare organizations when displayed from one (1) flag staff per premises in accord with United States Public Law 623 (Flag Display Practice).

(h) Directional Signs and Symbols:

(1) Non-advertising directional signs or symbols (e.g., entrance, exit, caution, slow, no trespassing) located on and pertaining to a parcel of private property, not to exceed two (2) square feet and forty-two (42) inches in height. Such directional signs may have the name of the business, but may not contain advertisements for sales, specials, and the like.

(2) Property Owners Associations (POAs)

Property Owners Associations will be allowed to place interior directional signs along city right-of-ways in neighborhoods. Said signs shall be no greater than six (6) square feet and not to exceed forty-two (42) inches in height, constructed of wood material, and sand blasted, carved or other similar lettering, aesthetically designed to harmoniously blend with the surrounding neighborhood.

(i) Memorial Signs and Historical Markers:

Memorial signs and historical markers constructed of bronze, stone or other incombustible material after historical authentication and location is approved by the City Council.

(j) Professional, Announcement or Occupational Signs:

One (1) each professional, announcement or occupational sign non-directly illuminated and flat wall mounted, and/or one (1) each outdoor advertising sign for privately-owned premises or business location, provided the area of the sign or the combined areas of both signs, if two (2) signs are erected, does not exceed five (5) square feet, and provided the premises or business location is without a permitted sign. (See Home Occupations, as defined in *Article 31*.)

(k) Non-Commercial Yard or Garage Sale Temporary Signs:

Noncommercial yard or garage sale temporary signs not exceeding one-and-one-half (1-1/2) square feet, which display the date(s) and the address of the sale. No more than four (4) directional yard sale signs may be placed. Said signs shall be removed as soon as the sale is concluded.

(l) Signs Incorporated on Machinery or Equipment:

Signs incorporated on machinery or equipment which advertise only the product or service dispensed by the machine or equipment, such as signs customarily affixed to vending machines, newspaper racks, telephone booths, and gasoline pumps, provided the combined area of such signs

does not exceed two (2) square feet. This shall include signs commonly referred to as “Pump Toppers” on top of gasoline pumps and shall be limited to two and one-half (2-1/2) square feet in dimensions. In recognition that parent oil companies often provide said signs to the subsidiary stations, minor deviations in size shall be allowed, subject to the approval of the Code Enforcement Officer.

(m) Indoor Signage or Window Signs:

Indoor signage or window signs which identify or advertise activities, services, goods, or products available within the building, and which collectively cover no more than twenty (20) percent of the window glass surface area.

(n) Marquee or Canopy Signs:

One (1) each business or professional identification sign mounted to extend vertically below a marquee or canopy, provided its area does not exceed six (6) square feet nor exceed the width of the marquee or canopy nor provide less than nine (9) feet of clearance above the sidewalk or pedestrian thoroughfare.

(o) Temporary Promotional Banner:

One temporary promotional banner in compliance with Section 33-5, *Signs Prohibited in All Districts*, no greater than twenty (20) square feet may be attached to and parallel to the face of the building wall for a period, not to exceed thirty (30) calendar days. (See *Article 8, Definition of Term*s, *Temporary Use*).

33-6 SIGNS PROHIBITED IN ALL DISTRICTS

The following signs are prohibited in all districts:

(a) Prohibited Placement:

Any sign erected or painted upon a sloped roof, fence, tree, stand pipe, fire escape, or utility pole, except the manufacturer's or installer's ID plate shall not exceed 5 x 8 inches in size.

(b) Prohibited Wording:

Any sign which uses the word "Stop" or "Danger" prominently displayed and/or which is a copy or imitation of official traffic control signs.

(c) Flashing Signs Prohibited:

(1) General Prohibition:

Signs which contain intermittent illuminations are prohibited.

(2) Exceptions:

This subsection does not prohibit the following:

(a) Signs required for traffic control.

(b) Signs which exhibit time, date, temperature, and other customary public information.

(c) Signs which contain intermittent illuminations provided the change is less than twelve (12) times per hour.

(d) Prohibited Sign Types:

Portable signs, bench signs, snipe signs, sandwich signs, except as allowed in *Section 33-5, Subsections (d)(e) or ladder-type signs.*

(e) Prohibited Sign Effects:

Signs which produce sound, noise, cause interference with radio, telephone, television or other communication transmission, produce or reflect motion pictures; emit visible smoke, vapor, particles, odor, are animated, or produce any rotation, motion, or movement.

(f) Billboards and Off-Premises Signs:

Billboards and off-premise signs as defined in this Ordinance.

(g) Vehicle Advertisement:

Any sign attached to or painted on a vehicle parked adjacent to or on a public right- of-way, thoroughfare, or public parking lot dedicated for public use for the principal purpose of advertising.

(h) Illuminated Tubing:

(1) General Prohibition:

Any illuminated tubing or strings of lights that outline property lines, sales area, roof lines, doors, windows, wall edges, similar areas or other architectural features of a building.

(2) Exception:

This prohibition shall not apply to temporary displays erected in connection with holiday decorations and community decorations.

(3) Grandfather Clause:

Any illuminated tubing located within the corporate limits prior to the enactment of this Ordinance is hereby grandfathered, provided however, that a permit for which no charge will be made is obtained for the illuminated tubing prior to the date upon which the next City of Daphne business license is due. Upon obtaining such permit, the business shall be granted "legal nonconforming" status as described in *Section 33-4, Subsection (a),* and shall be subject to the restrictions and provisions for loss of legal nonconforming status as set forth in *Section 33-4, Subsection (b).*

33-7 MAINTENANCE AND REMOVAL OF SIGNS

(a) General Maintenance Requirement:

All signs shall be maintained in good condition and appearance.

The Code Enforcement Officer, after due notice in writing to the owner, may remove, at the owner's expense, any sign which shows neglect or which appears abandoned, dilapidated, or dysfunctional, or an area of a distance ten (10) feet around such sign that is not kept free of weeds, rubbish, debris, or uncut grass, and maintained in compliance with City standards.

(b) Vacation of Premises:

Any sign associated with premises that have been vacated shall be either removed from the premises by the owner or lessee with three (3) months of the time of vacation, or said sign shall be altered or resurfaced by the owner or lessee within the same time period so that it does not display letters, numerals, symbols, figures, designs, or any other device for visual communication that would pertain to the activity formerly associated with the vacated premises.

(c) Public Right-of-Way:

The Code Enforcement Officer shall remove or cause to be removed any sign erected or maintained on any public right-of-way within the City, or which is in violation of any of the provisions of this Ordinance.

(d) Penalty for Violation:

The erection or maintenance of any sign in violation of this Ordinance is a misdemeanor and shall be subject to the penalties set forth in *Article 45, Penalties and Remedies.*

33-8 TRAFFIC CONTROL DEVICES ON PRIVATE PROPERTY

When the owner of real property allows it to be used by the public for the purpose of vehicular traffic and/or as a public or quasi-public parking lot for the use of customers, tenants or employees of said property, the owner shall erect and maintain all traffic control signs and other devices in accordance with the Alabama Manual on Uniform Traffic Control Devices, and any revisions thereof. In addition, the owner shall meet the requirements of Section 32-5-31(a) of the Code of Alabama, 1975, (as amended), with respect to local authorities in their respective jurisdictions.

33-9 MUNICIPAL IDENTIFICATION OR DIRECTIONAL SIGNAGE

(a) Criteria:

That in any business park, office park, commercial park, and/or municipal facility, as distinguished from retail shopping centers for which such shall be specifically prohibited information/directional signs may be permitted subject to the following:

(1) That information/directional signs shall be permitted at locations as more specifically referenced herein, subject to prior licensing approval by the Code Enforcement Officer;

(2) That information/directional signs may be placed at a primary entrance to such business park, office park, commercial park, and/or municipal facility;

(3) That information/directional signs may be placed on public right-of-ways, on public places, and/or private property which private property may be common area servicing the business park, office park, or commercial park located within the park;

(4) That each information/directional sign may be single or double faced, and shall not exceed fifteen (15) feet in total height from ground level, which height shall include the City's identification logo with color to match to the existing logo at the top of the sign.

Such information/directional sign shall not have a total area in excess of fifty (50) square feet, excluding the City logo and shall not contain more than twelve (12) eight (8) inch panels, with each panel to be six (6) feet long. Each individual directional sign panel shall not include the City's identification logo. Each information/directional sign shall be appropriately landscaped with circumference of not less than three (3) feet around the base of the sign with bedding and appropriate seasonal planting.

(5) That each individual information/directional sign panel shall list only those users located within such business park, office park, commercial park, and/or municipal facility and shall be designed to provide directional assistance to travelers or otherwise only to identify users located within such business park, office park, and/or commercial park.

(6) That the City shall have final approval for the location, material, content, color, and design of the signs and individual panels, whether the information/directional sign is located on public or private property.

(7) That when the informational/direction sign is to be located on public property, the City shall be responsible for the erection, operation, content, and maintenance of each sign. The City may impose fees and enter into such written agreements for one (1) year intervals with interested businesses for the construction, installation and maintenance of such information/directional sign.

(8) That when the informational/direction sign is to be located on private property, all costs for construction, installation, design, and maintenance shall be incurred by the applicant.

(9) That information/directional signs shall not be considered a sign of any user, including users who own the land upon which the information/directional sign is located for purposes of determining the maximum number of signs, as otherwise permitted under *Section 33-11, Schedule of Permitted Sign Requirements,* of this Ordinance.

(10) That such information/directional signs shall not be located in such a manner as to materially impede the view of any street or highway intersection, nor shall such sign be located so as to prevent free ingress or egress from any door or window for a fire escape route.

(b) Issuance of Permits and Approval:

(1) That the City Clerk's Office and/or Code Enforcement Officer shall establish suitable forms and documentation to authenticate the issuance of such permit as approved by the City from time-to-time. Such permit for the placement of such sign shall be for a one (1) year interval subject to renewal annually from the initial issuance with the permitting to be re-approved by the City Council.

The City may deny the re-issuance of the information/directional sign permit should the sign and surrounding landscaping not be maintained in a satisfactory fashion during the preceding year.

(2) That should a private owner of such sign allow the sign or landscaping to become in disrepair or to otherwise be unkempt, the Code Enforcement Officer shall provide the permitted owner thirty (30) calendar days written notice to correct the deficiency to the satisfaction of the Code Enforcement Officer. Should the permitted owner not complete the remedial work within thirty (30) calendar days, the City may upon thirty (30) day notice thereafter revoke the permit of the owner and order the removal of the sign. Should the owner fail and/or refuse to remove the sign after the thirty (30) day time period, the City may enter upon the real property where the sign is situated for the limited purposes to effectuate the removal of the sign, and the cost incurred by the City for removal shall be taxed against applicant.

(c) Sign Construction:

All signage utilized in accord with the provisions of this Ordinance, shall be constructed in accordance with the following:

That all upright posts shall be 8" x 8" treated wood, embedded in the ground a minimum of four (4) feet, surrounded by a minimum

circumference of six (6) inches of three thousand (3,000) psi concrete.

(1) That all 2" x 12" treated ~~wooded~~ wooden cross supports shall be pinned together and routed into the 8" x 8" wooden posts, and then lag bolted into each post from the outside.

(2) That the City logo panel shall be constructed of sand blasted sign foam and painted pursuant to the standard color scheme of the logo.

(3) That all wooden posts and cross supports shall be painted black in color.

(4) That each individual sign panel shall be white plastic with appropriate colored lettering selected by the user.

33-10 PERMITTED SIGNS

The maximum allowable square footage established in each zoning designation and/or overlay district shall apply as provided in each district. Said allowable area shall not be exceeded. In the event that channel letters, as defined in *Article 8, Definitions*, are proposed, then the maximum allowable square footage shall be calculated at a rate of eighty percent (80%) in lieu of the standard rate of one hundred percent (100%).

Unless otherwise specified herein, the Schedule in *Section 33-11* contains requirements for signs permitted in each use district.

(a) Property Owners Association:

Signs conveying information regarding association activities and/or the use of common areas and other amenities of an incorporated Property Owners Association may be permitted subject to approval of the Planning Commission.

Such signs shall be of a material and design approved by the Planning Commission and shall not exceed thirty-five (35) square feet in area nor be greater than six (6) feet in height with changeable copy on no more than two (2) faces. Signs so permitted may be placed at up to a maximum of four (4) locations only within the subdivision on common property owned by the Property Owners Association.

(b) Name Indication Signs:

Signs indicating the name of any fixed dwelling or mobile home

subdivision; mobile home park; apartment, townhouse, condominium or planned unit development; office park, shopping center, industrial park or other residential or business complex permitted in any district; and signs for any use permitted by Right, with Planning Approval, or Special Exception in any residential district, are permitted.

Such signs shall not exceed fifty (50) square feet in area per face, two (2) faces, and a maximum of twenty-one (21) feet in height. One (1) such sign may be placed perpendicular to each City street frontage to be served.

Premises classified as "General Business (Shopping Center)" in Section 33-11 Schedule of Permitted Sign Requirements, shall be permitted one (1) sign, the area of which shall be determined according to the following formula: one (1) square foot of signage per thousand (1,000) square feet of the building; however, such sign shall not exceed one hundred fifty (150) square feet in area per face, two (2) faces, fifteen (15) feet in width, and a maximum of twenty-one (21) feet in height. Additionally, those so classified shall be permitted one sign not to exceed fifty (50) square feet in area per face, two (2) faces, maximum of twenty-one (21) feet in height. One (1) such sign may be placed perpendicular to each City street frontage to be served, of which is not supporting the larger sign.

Signs permitted under Section 33-10 shall require a permit, except as otherwise provided herein.

(c) Wall-Mounted Signs:

Each establishment in a shopping center or each business premises in B-1, Local Business, B-2, General Business, B-3, Professional, and C/I, Commercial/Industrial, districts may acquire an additional permit for a wall-mounted sign of a size not to exceed the lesser of three hundred (300) square feet or twenty (20) percent of the surface frontal area of its building or portion of building. Signs mounted on mansards, marquees, and awnings are deemed to be wall signs.

(d) Menu Type Signs:

One menu type sign per drive-thru window service not to exceed forty (40) square feet in area or eight (8) feet in height.

(e) Automobile Dealerships:

Automobile dealerships in the sale of the new vehicles shall be subject to the following:

(1) Numerical Limitation:

In addition to the allowed one (1) sign per street frontage, one (1) secondary ground sign per street frontage shall permitted only if two (2) or more automotive product lines (automotive makers) are offered for sale on the premises.

(2) Area Limitation:

The maximum area of the face for a secondary ground sign shall not exceed twenty-four (24) square feet and not higher than ten (10) feet above ground level.

(f) Gasoline and Fuel Signs:

Gasoline or other motor vehicle fuel pricing signs, in addition, to permitted name or identification signs, are permitted in any business or industrial district. Such signs shall not exceed twelve (12) square feet in area and must comply with the other sign requirements for the district in which they are located.

(g) New Construction Signs:

(1) General Provision:

Temporary non-illuminated signs not more than thirty-two (32) square feet in area, erected in connection with new construction work and displayed on the premises during such time as the actual construction work is in progress.

One (1) such sign, which shall not exceed ten (10) feet in height, is allowed for each street frontage. Such signs shall be removed upon completion of the project.

(2) Temporary Advertising Sign:

A temporary advertising sign will be permitted to the owner for the development for each individual business premises, shopping center premises, commercial/industrial business, subdivision, planned unit development, mobile home park and mobile home subdivision, provided the area of each sign shall not exceed thirty-two (32) square feet, is non-illuminated, and is within the confines of the development. A temporary sign advertising property for sale in a commercial/industrial (C/I) and all business (B-1, B-2 and B-3) zones, provided the area of each sign shall not exceed sixteen (16) square feet, is non-illuminated and is within the confines of the development.

These signs shall be the height no greater than ten (10) feet mounted from the ground, for no more than one (1) sign, either single or double faced, per street frontage.

Permits shall be issued for a period of one (1) year. An additional one (1) year permit may be issued if the Code Enforcement Officer has determined the promotion of the development is active and the temporary sign meets the maintenance requirements in Section 33-7. The temporary sign will be removed when a permitted permanent sign is erected.

(3) Time Limitations and Size Requirements:

A temporary sign will be permitted on each premises for a new business or a business starting in a new location where the premises is without a permitted permanent sign for a period of not more than sixty (60) days or until mounting of a permanently permitted sign, whichever occurs first, provided the temporary sign does not exceed thirty-two (32) square feet, is non-illuminated, mounted from a ground to a height not to exceed ten (10) feet. Said sign may be single or double faced.

(h) Conventions and Grand Openings:

Temporary signs and banners not exceeding fifty (50) square feet in area and temporary decorative flags, bunting, pennants and streamers for recognizing conventions and grand openings. Said temporary decorations and signs shall be kept in good condition and shall be permitted no more than fourteen (14) days.

(i) Public Interest Directional Signs:

A permanent or temporary sign, erected on private or public property, not exceeding six (6) square feet to denote the route to any city, town, village, historic or religious place, shrine, public building or facility, school, hospital, health care facility, public meeting, or public event when authorized by the City Council.

(j) Electronic Signs:

(1) General Prohibition:

Electronic signs are prohibited within the corporate limits with the following exception(s):

Public entities, limited to the Daphne Civic Center, Recreation, and Library Complex and Schools of the Baldwin County School System shall be allowed to maintain electronic signs on the premises of such entities for the sole purpose of providing (1) Information regarding onsite activities or (2) community information of general public interest (i.e.: City Council meetings, public service announcements (P.S.A.s), provided, however that such signs comply with the following requirements:

(a) Size:

(1) Signs shall be of the monument style.

(2) Signs shall not exceed ten (10) feet in height.

(3) Sign area shall not exceed fifty (50) square feet.

(4) Electronic display area shall not exceed thirty (30) square feet.

(b) Electronic Display Method:

Information shall be displayed via simple fade in/fade out manner.

(c) Time:

(1) Each message must be displayed for a minimum of twenty (20) seconds.

(2) Commercial Advertising:

(a) Prohibition:

In no case, however, is commercial advertising permissible within the electronic display area of any electronic sign facing a public road, in front of a school or public building, or on or around the supporting structure of the sign.

(k) Interstate Corridor Signs:

One "Name Indication" sign shall be allowed for any lot or parcel of property having a minimum of two hundred (200) feet of frontage space parallel, abutting to or otherwise sharing a common boundary line with Interstate 10 and/or interstate right- of-way, when a right-of-way that has no property other than a city, county, or state right-of-way between the subject real property and the interstate right-of-way. No sign shall be erected on any lot or parcel containing less than two hundred (200) feet of said frontage space. The sign shall be located at or very near the interstate right-of-way of the parcel, and shall contain no more than two hundred and fifty (250) square feet of signage.

Said sign shall be no greater than forty (40) feet in height, measured from the finished grade of the property and shall be no greater than twenty (20) feet in width. Any proposed sign to be erected shall be subject to the approval of the Planning Commission.

(l) Commercial/Retail Development Interior Street Signs:

Inasmuch as commercial developments continue to arise within the city limits which contain private interior streets with retail and/or business space being located on both sides of said private interior streets, advertising signs shall be allowed to be placed at each end of the private interior street. Said sign shall be either a monument, street lamp, or hanging sign style. Said signs shall be limited to thirty (30) square feet on each side of the sign, regardless of the number of businesses located on said private interior street.

Monument style signs shall be no higher than five (5) feet, and street lamp style signs shall be no higher than twenty (20) feet, both to be measured from the finished grade. Any proposed sign to be erected shall be subject to the approval of the Planning Commission.

33-11	**SCHEDULE OF PERMITTED SIGN REQUIREMENTS**				
Zoning District	**Type of Use**	**Max. Area/ Face**	**No. of Faces**	**Max. Height**	**Max No. of Signs Permitted**
R-1	SF Residential	6 sq ft	1	6 ft	1 per premises
R-2	SF Residential	6 sq ft	1	6 ft	1 per premises
R-3 & R-6(D,G)	SF Residential	6 sq ft	1	6 ft	1 per premises
R-4 & R-7(A,M,T)	MF Residential	6 sq ft	1	6 ft	1 per premises
R-5	MH Residential	6 sq ft	1	6 ft	1 per premises
B-1	Local Business	50 sq ft	1 per premises	21 ft	1 per street frontage
B-2	General Business	50 sq ft	2 per premises	21 ft	1 per street frontage 2 if premises frontage is greater than 1,000 linear ft
B-2	General Business (Shopping Center)	--	2 per premises	21 ft	1 sq. ft. of signage per 1,000 sq ft of floor space for facilities or commercial buildings over 50,000 sq. ft. of floor space. Max signage of 150 sq ft and max width of sign, 15 ft.
		50 sq ft	2 per premises	21 ft	1 per street frontage, which is not supporting the larger sign.
B-3	Professional Business	30 sq ft	2 per premises	10 ft	1 per street frontage
C/I	Commercial/ Industrial	50 sq ft	2 per premises	21 ft	1 per street frontage

33-12 FEES

Fees for each permitted sign under §33-10 and §33-11 shall be as specifically enumerated in *Article 34, entitled the Schedule of Fees*.

ARTICLE XXXIV
SCHEDULE OF FEES

34-1 FEES

With the exception of sign permits, the following is a schedule of fees assessed by the Department of Community Development in the administration of the Land Use and Development Ordinance. Sign permit requests shall be reviewed by the Code Enforcement Officer as provided in *Article 33, Sign Provisions*.

Description	Fee
• Administrative Review Request-BZA	$300
• Annexation with R-1 zoning	n/a
• Annexation with Zoning Petition	$500
• Final Plat Application (see also*)	$250
• Grand Opening Sign Permit	$25
• Master Plan Review or Master Plan Amendment Review	$50
• Mobile Home Park Annual License	Contact Revenue Department
• Mobile Home Park Application	See Site Plan
• Notice to Public by Certified Mail Per adjoining property owner plus one*	The greater of $5.75 per letter *or standard rate of USPS*
• Plat Amendment	$100
• Preliminary or Preliminary/Final Plat Application	$300
• Public Hearing Advertisement Fee**	$35
• Request for the Extension (Site Plan or Preliminary Subdivision Plat approval)	$100 per request
• Request for the Extension of Reversionary Period	$500.00

• Sign Permit	$2.50 per square foot (minimum $25.00)
• Site Disturbance Permit Said fee is based upon site costs, not to include cost of building construction. Application shall be accompanied by a cost estimate of incomplete work certified by the project engineer.	$20.00 application fee plus $5.00 per $1,000 or fraction thereof
• Site Plan Application	$500
• Site Plan Renewal/Extension Fee	$100
• Special Exception Application-BZA	$300
• Subdivision Per Lot Fee	$20
• Subdivision Plat Exemption and/or Modification	$50
• Vacation of Easement and/or Right-of-Way	$200
• Variance Application-BZA	$300
• Zoning Amendment Application	$500

a. Any application which requires a public hearing shall be assessed a fee determined as follows: [application fee + (public notice fee) **x** (number of adjacent properties plus one) + advertisement fee]. **

b. Subdivisions requiring a public hearing shall be calculated as above plus an additional fee for each lot (number of lots) **x** (per lot fee).

c. Sign permit applications shall be submitted to the City of Daphne Revenue Department.

d. Mobile Home Park Annual License shall be submitted to the City of Daphne Revenue Department.

ARTICLE XXXV
TABLE OF PERMITTED USES

The Table of Permitted Uses lists all of the allowable uses within the City limits and shows the zoning district in which such uses are allowed. Uses not provided for herein are prohibited. In order to promote consistency and fairness, and to avoid arbitrary and capricious decisions, the *North American Industry Classification System (NAICS)*, most current edition is hereby adopted as a reference and shall become a part of the Land Use Ordinance as an expansion of uses similar in nature but not expressly provided in the Table of Permitted Uses. The NAICS manual shall be used to provide definitions of each use or use groupings listed in the table. All sub-uses listed under a use in the NAICS manual, which is permitted in the zoning designation in question, shall be considered as a permitted use.

35-1 DEFINITIONS

The uses permitted in each of the zoning districts are categorized in the Table of Permitted Uses as follows:

(a) Uses by Right:

Uses permitted by right are subject to the conditions specified in the following table or otherwise provided herein.

(b) Uses Requiring Planning Approval:

Uses permitted upon approval by the Planning Commission depend on the location and determining whether the use is appropriate having considered the following: transportation, access, water supply, waste disposal, fire and police protection, and as not causing undue traffic congestion or traffic hazards, and harmony with the orderly and appropriate development of the district in which the development is to occur.

(c) Special Exceptions:

These uses are subject to the same approval of location and site plan as uses requiring planning approval; in addition, these uses are subject to approval of the Board of Zoning Adjustment in accordance with the provisions provided herein.

35-2 LIST OF DISTRICTS & CROSS REFERENCE FOR R-4 DESIGNATION

Residential Zoning Districts
R-1, Low Density Single Family Residential District
R-2, Medium Density Single Family Residential District
R-3, High Density Single Family Residential District
R-4, High Density Single & High Density Multi-Family Residential District
R-5, Mobile Home District
R-6(D), Duplex-Two Family District
R-6(G), Garden or Patio Home District
R-7(A), Apartment District
R-7(M), Mid-Rise Condominium District
R-7(T), Townhouse District
Business Districts
B-1, Local Business District
B-2, General Business District
B-3, Professional Business District
MU, Mixed Use District
Industrial Districts
C/I, Commercial Industrial District
Outdoor Amusement District
C-2, Outdoor Amusement District
Golf Course District
GC, Golf Course District

The term R-4 shall be synonymous with the newly adopted zoning designations as provided in *Article 12, Establishment of Districts.* **The Planning Commission shall no longer consider zoning or rezoning amendments for an "R-4 zoning district".** All existing R-4, High Density Single and Multi-Family Residential Districts shall be developed in accordance with the standards provided herein; however, R-6(G), R-6(D), R-7(A), R-7(M) and R-7(T) shall be respectively considered for all garden/patio homes, duplexes, apartments, mid-rise condominiums and townhouses requests.

Note: Properties subject to a substantial change in use may be required to make site improvements including but not limited to parking, buffering, landscaping or other improvement necessary to meet the spirit and intent of the Land Use and Development Ordinance as determined by the Director of Community Development in the administrative review process.

SECTION 35-3 PERMITTED USES & CONDITIONS	Right	Planning Commission Approval	Special Exception BZA Approval
Accessory buildings and uses, when located on the same lot or parcel as the principal structure or use and customarily incidental thereto, provided the requirements in all pertinent sections of this Ordinance are met	R-1 R-2 R-3 R-4 R-5 B-1 B-2 B-3 C/I C-2 GC		
Agriculture and related farming operations, including horticulture, plant nurseries market gardening, field crops, orchards, and home gardens	R-1 R-2 R-3 R-4 R-5 B-1 B-2 B-3	GC C-2	
Air conditioning sales and service	B-1 B-2 C/I		
Ambulance/EMS service	B-1 B-2 C/I	B-3	
***Amusement arcade**	B-2		
Kiddie land	B-2	C/I	
Animal clinic/kennels for small animals; need not be enclosed within a structure	B-2 C/I		
Antique store, including repairing, restoration and refinishing	B-2 C/I		
Apparel and accessory store	B-1 B-2		
Appliance store	B-1 B-2		

SECTION 35-3 PERMITTED USES & CONDITIONS	Right	Planning Commission Approval	Special Exception BZA Approval
Armory	B-1 B-2	C/I	R-4 R-5
Art gallery or museum	B-1 B-2		R-1 R-2 R-3 R-4 R-5 B-3
Art sculptures, statues, monuments		B-1 B-2 B-3 C/I	R-1 R-2 R-3 R-4 R-5
Art supplies	B-1 B-2		
Auditoriums, stadiums, coliseums, and other such places of public assembly		B-2 C/I	R-1 R-2 R-3 R-4 R-5
Automobile Air Conditioning Sales and Service	B-2 C/I		
Automobile Glass and Upholstery Installation	B-2 C/I		
Automobile laundry, where the primary function is washing automobiles, but not including trucks or trailers; operations shall be conducted only within a completely enclosed structure, and all wastes shall be discharged directly into the sewer	B-2 C/I		

SECTION 35-3 PERMITTED USES & CONDITIONS	Right	Planning Commission Approval	Special Exception BZA Approval
Automobile parts sales, except used parts	B-2 C/I		
Automobile wrecking and salvage; need not be enclosed within a structure, but must be enclosed with a solid fence sufficiently high to obstruct noise and view; chain link or similar open fence may be permitted if a screen planting adequate to obstruct view is provided		B-2 C/I	
Automobile, travel trailer, camper, farm equipment and implements and mobile home sales (new and used); need not be enclosed within a structure, but any mechanical or body repair must be done entirely within a structure which shall not have any opening, other than a stationary window, within 100 feet of a residential district	B-2 C/I		
Automobile and truck laundry, including steam cleaning	C/I		
Automobile and truck repair garage, mechanical and body; must be conducted in a structure which shall not have any openings other than a stationary, within 100 feet of a residential district and which shall not store or otherwise maintain any parts or waste materials outside such structures	B-2 C/I		
Automobile and truck sales and service; but not including commercial wrecking, dismantling, or auto salvage yard; need not be enclosed within a structure provided the unenclosed part shall comply with the requirements for maintenance of off-street parking facilities	B-2 C/I		

SECTION 35-3 PERMITTED USES & CONDITIONS	Right	Planning Commission Approval	Special Exception BZA Approval
Automobile and truck service station including minor repair, subject to the requirements listed under Special Provisions, where the primary function is retail sale of gasoline, oil, grease, tires, batteries and accessories and where services are limited to installation of the items sold, washing, polishing, tire changing, greasing and minor repairs, but not including commercial wrecking, dismantling or auto salvage yard, major mechanical overhauling or body work; fuel pumps need not be enclosed within a structure	C/I	B-1 B-2	
Bakery, retail	B-1 B-2		
Bakery, wholesale	B-2 C/I		
Bank, including drive-in bank	B-1 B-2 B-3		
Barber shop or beauty parlor	B-1 B-2		
Barber and beauty supplies and equipment sales	B-2 C/I		
Bed & Breakfast		R-1 R-2 R-3	
Bicycle, lawnmower sales, service and repair	B-2 C/I		
***Billiard or pool hall**	B-2		
Boat construction, storage, service and repair, wet and dry, major; need not be enclosed within a structure	C/I	B-2	
Boat dry storage; pleasure boats having lengths not greater than 31 feet	B-2 C/I		

SECTION 35-3 PERMITTED USES & CONDITIONS	Right	Planning Commission Approval	Special Exception BZA Approval
Boat sales, accessories and service	B-2 C/I		
Boat storage, service and repair, minor; a marina for docking pleasure boats and providing services thereto and to the occupants thereof, including minor servicing and minor repair to boats while in the water, sale of fuel and supplies, and provision of lodging, food, beverages and entertainment as accessory uses, may include dry storage in an enclosed structure	B-2 C/I		
Book store	B-1 B-2		
Bottling works	C/I	B-2	
Bowling Alley	B-2		
Building materials supply, provided that major storage areas are screened from view and that any machine operations are conducted entirely within an enclosed structure with no opening other than a stationary window within 100 feet of a residential district	B-2 C/I		
Bus and railroad terminal facilities	B-2 C/I		
Business machines sales and service	B-2 C/I	B-1	
Business school or college		B-1 B-2 B-3	
Butane and other liquefied petroleum gas products storage and sales; need not be enclosed within a structure			B-2 C/I
Cabinet or carpenter shop; customized marble, granite, stone countertops	B-2 C/I		

SECTION 35-3 PERMITTED USES & CONDITIONS	Right	Planning Commission Approval	Special Exception BZA Approval
Cafe, grill, lunch counter and restaurant but not including night club, bar, tavern and drive-in restaurant	B-1 B-2		
Camera and photographic supply store	B-1 B-2		
Candy, nut and confectionery store	B-1 B-2		
Canvas products manufacture	C/I	B-2	
Carting, express, crating, hauling, storage	B-2 C/I		
Catering shop or service	B-1 B-2		
Cemetery, subject to requirements of the Special Provisions			R-1 R-2 R-3 R-4 R-5 B-1 B-2 B-3 C/I GC C-2
Churches and related accessory buildings	B-1 B-2 B-3		R-1 R-2 R-3 R-4 R-5 C/I
City Hall, police station, fire station, courthouse, federal office building and similar public building	R-1 R-2 R-3 R-4 R-5 B-1 B-2 B-3 C/I	C-2 GC	

SECTION 35-3 PERMITTED USES & CONDITIONS	Right	Planning Commission Approval	Special Exception BZA Approval
Clay and clay products manufacture; need not be enclosed within a structure	C/I	B-2	
Clinic, dental, medical or psychiatric for humans	B-1 B-2 B-3		R-1 R-2 R-3 R-4 R-5 C/I
Club or lodge, fraternal, civic, charitable or similar organization, public or private, but not including any such club, lodge or organization, the chief activity of which is a service or product customarily carried on as a business	B-1 B-2	C/I	R-1 R-2 R-3 R-4 R-5
College or university, provided that they are located on a lot fronting on an arterial street or road and that no building is located within 100 feet of any property line		B-1 B-2 B-3	R-1 R-2 R-3 R-4 R-5
College sorority or fraternity house		B-1 B-2 B-3	R-1 R-2 R-3 R-4 R-5
Communications Towers		C/I	B-2
Concrete and concrete products manufacture; need not be enclosed within a structure	C/I		
Contractor's storage yard for vehicles, equipment, materials and supplies; need not be enclosed within a structure, but must be enclosed within a solid fence to screen view; chain link or similar open fence may be permitted if a screen planting adequate to obstruct the view is provided	B-2 C/I		
Convenience Store	B-2	B-1	
Correctional, detention or penal institution			B-2 C/I

SECTION 35-3 PERMITTED USES & CONDITIONS	Right	Planning Commission Approval	Special Exception BZA Approval
Dairy equipment sales	B-2 C/I		
Dairy products sales	B-1 B-2		
Delicatessen	B-1 B-2		
Department store	B-2		
Dog pound; need not be enclosed within a structure	C/I	B-2	
Drive-in restaurant	B-2	B-1	
Drug Store	B-1 B-2		
Dry cleaning shop, including self-service	B-1 B-2		
Dry goods or fabric store	B-1 B-2		
Dwelling, one-family	R-1 R-2 R-3 R-4		
Dwelling, two-family	R-4		
Dwelling, multi-family	R-4		
Electric power generating plant			B-2 C/I
Electric power substation; need not be enclosed within a structure, but must be secured by a chain link or similar fence, or raised above ground so as to be inaccessible to unauthorized persons; requires visual screen in most districts		R-1 R-2 R-3 R-4 R-5 B-1 B-2 B-3 C/1 GC C-2	
Electric repair shop	B-2 C/I		
Electric Supply Store	B-2 C/I		

SECTION 35-3 PERMITTED USES & CONDITIONS	Right	Planning Commission Approval	Special Exception BZA Approval
Elevator maintenance service	B-2 C/I		
Employee credit union office	B-1 B-2 B-3		
Exterminator service office	B-2 C/I	B-1	
Farm and garden equipment and supply store	B-2 C/I		
Farmers' markets	B-2 C/I		
Fix-it shop, including small appliance repair	B-1 B-2 C/I		
Floor covering sales and service	B-1 B-2 C/I		
Floral shop	B-1 B-2		
Food locker plant including rental of lockers for the storage of food; cutting and packaging of meats and game, but not the slaughtering of animals or fowl.	B-2 C/I		
Food products processing plant	B-2 C/I		
Food products, wholesale storage and sales	B-2 C/I		
Freight depot, railway or truck	C/I	B-2	
Fruit and produce, retail	B-1 B-2		
Funeral home, mortuary or undertaking establishment	B-1 B-2		
Furniture and home furnishing store, including office furniture and equipment	B-2 C/I		
Furniture repair, including upholstering and refinishing	B-2 C/I		

SECTION 35-3 PERMITTED USES & CONDITIONS	Right	Planning Commission Approval	Special Exception BZA Approval
Gas regulator station		R-1 R-2 R-3 R-4 R-5 B-1 B-2 B-3 C/I GC C-2	
Gift shop	B-1 B-2		
Grocery store, retail	B-1 B-2		
Gymnasium, commercial	B-1 B-2		
Hardware store, retail, wholesale, storage and sales	B-1 B-2		
Hatchery, poultry or fish	C/I		
Heating and plumbing equipment, supplies and service	B-2 C/I		
Hobby shop and supply store	B-1 B-2 C/I		
Home occupation	R-1 R-2 R-3 R-4 R-5 B-1 B-2 B-3		
Hospital, clinic, convalescent or nursing home, extended care facility or sanitarium for humans		B-1 B-2 B-3	R-1 R-2 R-3 R-4 R-5
Hotel	B-2	B-1	
Extended stay hotel facility	B-2		
Motel	B-2	B-1	
Ice cream parlor	B-1 B-2		

SECTION 35-3 PERMITTED USES & CONDITIONS	Right	Planning Commission Approval	Special Exception BZA Approval
Ice plant	C/I		
Industrial park	C/I		
Innovative design developments		R-4	
Institution for children or the aged, day care			R-1 R-2 R-3 R-4 R-5 B-1 B-2
Interior decorating shop	B-1 B-2		
Junk yard including storage, baling or sale of rags, paper, iron or junk; need not be enclosed within a structure but must be enclosed within a fence of sufficient height to obstruct view and noise; chain link or similar fence may be permitted if screen planting is provided.	C/I		
Kindergarten, play school or day care center, public or private, provided that all activities are carried on in an enclosed building or fenced yard and that all applicable federal, state and local requirements are met.			R-1 R-2 R-3 R-4 R-5 B-1 B-2
Laboratory, scientific	C/I		B-2
Laboratory, medical or dental	B-1 B-2 C/I		
Landscape garden sales; need not be enclosed within a structure	B-1 B-2 C/I		
Laundry, self-service	B-1 B-2	R-4	
Laundry, and dry cleaning pick-up station	B-1 B-2		
Laundry and dry cleaning plant	B-2 C/I		

SECTION 35-3 PERMITTED USES & CONDITIONS	Right	Planning Commission Approval	Special Exception BZA Approval
Laundry, linen supply or diaper service	B-2 C/I		
Leather goods or luggage goods store	B-1 B-2		
Liquor, wine or beer sales not to be consumed on premises and meeting local and state requirements.	B-1 B-2		
Library	R-1 R-2 R-3 R-4 R-5 B-1 B-2		
Loan office	B-1 B-2		
Locksmith	B-1 B-2		
Lodging and tourist homes			R-4 B-1 B-2
Lumber yards and building materials; need not be enclosed within a structure	B-2 C/I		
Machine Shop	C/I	B-2	
Machinery, tools and construction equipment, sales and service	C/I		B-2
Mail order house	B-2 C/I		
• **MANUFACTURING, REPAIR, OF A LIGHT INDUSTRIAL NATURE, ASSEMBLY OR INCLUDING, PROCESSING BUT NOT LIMITED ESTABLISHMENTS TO THE FOLLOWING:**			
Automobile assembly	C/I		
Clothing and garment manufacturing	C/I		

SECTION 35-3 PERMITTED USES & CONDITIONS	Right	Planning Commission Approval	Special Exception BZA Approval
Food products processing and packaging	C/I		
Glass products manufacturing	C/I		
Laboratories for testing materials, chemical analysis, photographic processing.	C/I		
Metal products manufacturing	C/I		
Millwork and similar wood products manufacturing	C/I		
Musical instruments and parts manufacturing	C/I		
Paper products manufacturing	C/I		
Plastics manufacturing	C/I		
Scientific, optical and electronic equipment--- assembly and manufacturing	C/I		
Shipbuilding and repair yard; need not be enclosed within a structure	C/I		
Souvenirs and novelties manufacturing	C/I		
Surgical and dental supplies manufacturing	C/I		
Toy, sporting goods and athletic goods manufacturing	C/I		
Marine stores and supplies	B-2 C/I		
Manufactured Home	R-5	R-3 R-4	
Mobile Home and/or Mobile Home Park	R-5		
Mobile Home Subdivision	R-5		
Motorcycle sales, service, and repair	B-2 C/I		
Music store	B-1 B-2		

SECTION 35-3 PERMITTED USES & CONDITIONS	Right	Planning Commission Approval	Special Exception BZA Approval
Natural preservation areas including bird and wildlife sanctuaries, nature and hiking trails		R-1 R-2 R-3 R-4 R-5 B-1 B-2	
News stand	B-1 B-2		
Night club, bar, tavern and cocktail lounge when separate from a restaurant	B-1 B-2		
Office buildings, general	B-1 B-2 C/I		
Office buildings, professional	B-1 B-2 B-3		
Office equipment and supplies, retail	B-1 B-2		
Oil and gas exploration and production activities			R-1 R-2 R-3 R-4 R-5 B-1 B-2 B-3 C/I C-2 GC
Optician	B-1 B-2 B-3		
Paint and wallpaper store	B-1 B-2 C/I		
Painting and decorating contractor	B-2 C/I		
Paper supplies, wholesale	B-2 C/I		
Pawn Shop	B-2		B-1
Pet shop	B-2		B-1
Photographic studio and/or processing	B-1 B-2		

SECTION 35-3 PERMITTED USES & CONDITIONS	Right	Planning Commission Approval	Special Exception BZA Approval
Picture framing and/or mirror silvering	B-2	C/I	B-1
Planned Unit Development, fixed dwelling		R-1 R-2 R-3 R-4	
Planned Unit Development, mobile home		R-5	
Plastic fabrication	C/I	B-2	
Plumbing shop	B-1 B-2 C/I		
Police substation, including Highway Patrol		R-1 R-2 R-3 R-4 R-5 B-1 B-2 B-3 C/I GC C-2	
Post office		R-1 R-2 R-3 R-4 R-5 B-1 B-2 B-3 C/I GC C-2	
Printing, blueprinting, bookbinding, photostating, lithographing and publishing establishment.	B-1 B-2 C/I		
Public utility production and maintenance buildings with proper screening		B-1 B-2 C/I	
Public utility substation with proper screening		R-1 R-2 R-3 R-4	

SECTION 35-3 PERMITTED USES & CONDITIONS	Right	Planning Commission Approval	Special Exception BZA Approval
		R-5	
Public utility substation with proper screening (continued)		B-1 B-2 B-3 C/I	
Radio and television antenna (amateur)	R-1 R-2 R-3 R-4 R-5 B-1 B-2 B-3 C/I	GC C-2	
Radio and television station and transmitting tower (commercial)		C/I	B-2
Racquetball or tennis courts, indoor		R-1 R-2 R-3 R-4 R-5 B-1 B-2 C/I GC C-2	
Roofing and sheet metal shop	C/I	B-2	
Rug and/or drapery cleaning service contained within a structure	C/I	B-2	
Sand and gravel storage yard; need not be enclosed within a structure	C/I	B-2	
Sawmill or planing mill	C/I	B-2	
Schools, public and/or private, elementary and/or secondary meeting the requirements of the education laws of the State of Alabama			R-1 R-2 R-3 R-4 R-5 B-1 B-2 B-3 C/I

SECTION 35-3 PERMITTED USES & CONDITIONS	Right	Planning Commission Approval	Special Exception BZA Approval
Seafood store, retail	B-1 B-2		
Sewage disposal plant; need not be enclosed within a structure		B-2 C/I	
Shoe repair shop	B-1 B-2		
Shoe store, retail	B-1 B-2		
Sign shop	B-2 C/I		
Sporting goods store	B-1 B-2		
Stone monument sales, retail; may include cutting and processing merchandise sold at retail on the site; need not be enclosed within a structure	C/I		B-2
Studio for dance or music	B-1 B-2		
Studio for professional work or teaching of fine arts such as photography, drama, speech and painting	B-1 B-2		
Surgical or dental supplies retail	B-2 C/I		
Tailor shop	B-1 B-2		
Taxi dispatching station	B-1 B-2		
Taxi terminal, storage and repair of vehicles	B-2 C/I		
Taxidermy shop	B-1 B-2 C/I		
Teen club or youth center			R-1 R-2 R-3 R-4 R-5 B-1 B-2

SECTION 35-3 PERMITTED USES & CONDITIONS	Right	Planning Commission Approval	Special Exception BZA Approval
Telephone exchange		R-1 R-2 R-3 R-4 R-5 B-1 B-2 B-3 C/I GC C-2	
Telephone equipment storage including shops and garage; need not be enclosed within a structure but must provide adequate screening	B-2 C/I		
Temporary uses, including revival tents, sale of Christmas trees, carnivals, sale of seasonal fruit and vegetables from roadside stands, and similar uses, for a period not to exceed four (4) weeks in any calendar year	B-1 B-2		
Theater, indoor	B-2	B-1	
Tires, batteries and other automotive accessories sales establishments	B-2 C/I		
Tobacco store	B-1 B-2		
Tourist Home			R-4 B-1 B-2
Toy Store	B-1 B-2		
Trade school or college			
Transit vehicle storage and servicing; need not be enclosed within a structure		B-2 C/I	
Variety Store	B-1 B-2		
Veterinary service	B-2		

SECTION 35-3 PERMITTED USES & CONDITIONS	Right	Planning Commission Approval	Special Exception BZA Approval
	C/I		
Warehouse and storage facilities, minor; mini-type do-it-yourself storage facilities		B-2 C/I	
Water storage; need not be enclosed within a structure		R-1 R-2 R-3 R-4 R-5 B-1 B-2 B-3 C/I GC C-2	
Water or sewage pumping station		R-1 R-2 R-3 R-4 R-5 B-1 B-2 B-3 C/I GC C-2	
Welding shop	C/I	B-2	
Well drilling company	B-2 C/I		
YMCA, YWCA and similar institutions			R-1 R-2 R-3 R-4 R-5 B-1 B-2
Zoo			B-2 C/I

SECTION 35-4 PERMITTED OUTDOOR AMUSEMENT USES & CONDITIONS	**Right**	**Planning Commission Approval**	**Special Exception BZA Approval**
Amusement park	C-2	B-2	
Amphitheater	C-2		
Archery range	C-2	B-2	
Athletic field or stadium such as baseball, football, soccer, etc. or similar use, provided that no building for such purposes is located within 100 feet of any property line	C-2		
Baseball batting range	C-2	B-2	
Boat docking only of pleasure boats as an accessory use to a permitted principal use; maximum of three (3) slips per unit. Boat service is prohibited	C-2	B-1 B-2 R-1 R-2 R-3 R-4 R-5	
Circus or carnival, fairground	C/I C-2	B-2	
Golf, driving range and practice tee	C-2	B-2 B-1	
Golf course, miniature	C-2	B-1 B-2	
Marina, minor; see boat storage, service and repair minor	C-2	B-2 C/I	
Marina, major; see boat construction, storage, service and repair, wet and dry, major; may also include boat sales, accessories and service	C/I C-2	B-2	
Other (outdoor) commercial amusement establishment	C-2		
Park or playground including recreation centers; need not be enclosed within a structure		B-1 B-2 R-1 R-2 R-3 R-4 R-5	

SECTION 35-4 PERMITTED OUTDOOR AMUSEMENT USES & CONDITIONS	**Right**	**Planning Commission Approval**	**Special Exception BZA Approval**
Riding stables or academy, horses; need not be enclosed within structure	C-2	B-1 B-2 R-1 R-2 R-3 R-4 R-5	
Roller-skating and ice-skating rink	C-2		
Skate board park	C-2		
Swimming pool, commercial	C-2	B-2	
Tennis courts or club, outdoor; need not be enclosed within a structure; no building for such purposes is located within 100 feet of any property line	C-2	R-1 R-2 R-3 R-4 R-5 B-1 B-2 C/I	
Theater, outdoor/drive-in; need not be enclosed within a structure	C-2		

SECTION 35-5 PERMITTED GOLF COURSE USES & CONDITIONS	**Right**	**Planning Commission Approval**	**Special Exception BZA Approval**
Golf Course may include country club, golf course and ancillary use, privately or publicly owned and operated, provided that no building for such purposes is located within 100 feet of any property line and/or green space.	GC		

ARTICLE XXXVI
THE VILLAGE OVERLAY DISTRICT

36-1 PURPOSE

The intent of this Article is to provide for the creation of the district in order to establish minimum standards and provisions for residential, business, or commercial development in the areas outlined the map provided herein and to achieve a healthy, beautiful, and safe community by the following means:

- **Aesthetics:** Improve the appearance of all areas through the incorporation of innovative landscaping and open space into development in ways that harmonize and enhance the natural beauty of the environment.

- **Land Values**: Maintain and increase the value of land by incorporating innovative designs and criteria into development, thus becoming itself a valuable capital asset.

- **Human Values**: Provide direct and important physical and psychological benefits to human beings through the use of landscaping and tree preservation as a buffer zone between residential and business development to reduce noise and glare, and to break up the monotony and soften the harsher aspects of urban development.

- **Improved Design**: Promote innovative and cost conscious approach to the design and construction of the District.

- **Improved Administration and Enforcement**: Establish procedures and standards for the administration and enforcement of this Article.

36-2 USES PERMITTED

The following zoning districts provided herein established and most specifically defined in *Article 12, Establishment of Districts*: B-1, Local Business, B-2, General Business, B-3, Professional Business, R-4, Single Family and Multi-Family Residential, and MU, Mixed Use. *Article 35, the Table of Permitted Uses and Conditions*, outlines the restrictions for each district.

The term R-4 shall be synonymous with the newly adopted zoning designations as provided in *Article 12, Establishment of Districts.* The Planning Commission shall no longer consider zoning or rezoning amendments for an R-4 zoning district. All existing R-4, High Density Single and Multi-Family Residential Districts shall be developed in accordance with the standards provided herein; however, R-6(G), R-6(D), R-7(A), R-7(M) and R-7(T) shall be respectively considered for all garden/patio homes, duplexes, apartments and townhouses, and mid-rise condominiums requests.

36-3 SPECIAL PROVISIONS

The following shall apply:

(a) The provisions of this Article shall be required for all residential projects involving the construction of two (2) or more dwelling units including apartments, town homes, condominiums, planned unit developments, subdivisions, business, commercial, industrial, and/or institutional structures; all existing structures which increase the gross floor area by thirty (30) percent or more, except a single family residence; construction of a park, public way, open space, public building or structure; construction of a public utility whether publicly or privately owned; and other uses as required by the Planning Commission. A golf course which was in existence prior to the enactment of this Ordinance is hereby exempt from the provisions of this Article.

(b) Size of properties reserved or laid out for business, or commercial purposes shall be adequate to provide for the off-street service and parking facilities required by the type of use and development contemplated.

(c) A site plan review shall be accomplished by the recommendation of the Director of Community Development and approval of the Planning Commission to assure compliance with the provisions of Land Use and Development Ordinance in conformity with its purpose as stated in Article I, as well as, applicable Building and Fire Codes, latest edition.

(d) Said approval shall be authorization to begin work, subject to the issuance of a Site Disturbance Permit. Such approval shall become void upon one (1) year from the date of approval if no such permit has been acquired and/or if no such building or construction activity has occurred.

(e) When all required improvements are installed, the developer/owner shall call for a final inspection. The Director of Community Development or his/her duly authorized representative shall inspect the site to determine if the required improvements are satisfactorily installed according to the plans and specifications.

(f) Applicant shall be responsible for posting a sign providing public notice of site plan review. Failure to post said sign fifteen (15) calendar days prior to Planning Commission review, shall cause the application to be withdrawn from the meeting agenda. Said sign shall not be an advertisement sign for the proposed project, but an advertisement of the Planning Commission meeting dates and times in accordance with the standards established for such provided in the Supplemental Information.

36-4 PLAN CONTENT

The plan shall contain all information shown on the current departmental check list for a site plan which may be modified at the discretion of the Director of Community Development when applicable.

36-5 WAIVER

The Director of Community Development may waive certain requirements contained in this Article if, in his/her opinion, the requirements are not essential to a proper decision on the project; or, he/she may supplement the list with other requirements deemed necessary to clarify the nature of the proposed development.

36-6 FEES

An application for site plan review shall be accompanied by the appropriate fee as more specifically enumerated in *Article 34, Schedule of Fees*.

36-7 ISSUANCE OF SITE DISTURBANCE PERMIT

Each person, firm, corporation, utility, entity or agent thereof engaged in any site preparation and/or construction activities shall acquire a Site Disturbance Permit from the Department of Community Development prior to commencement of such activities as established pursuant to the provisions of this Article and no such activity shall commence prior to the approval of the site plan by the Planning Commission. Fees for said permit shall be as more specifically enumerated in *Article 34, Schedule of Fees.*

36-8 ISSUANCE OF BUILDING PERMIT

Upon approval of the site plan, either as submitted or with changes and/or special conditions required by the Planning Commission, the Building Official may issue a building permit for a portion or all of the proposed development provided that the application is in compliance with all applicable City, County, State and Federal requirements.

36-9 PARKING REQUIREMENTS

Any business use located within the Village Overlay District with a lot frontage of fifty (50) feet shall require a minimum of four (4) parking spaces, with a lot frontage of twenty-five feet shall require a minimum of two (2) parking spaces, and shall also comply with the minimum design and improvements standards as otherwise outlined in this Ordinance and ADA requirements.

Off-street parking for multi-use or mixed use developments shall be located in the rear of the building(s) adjacent to the street.

For any use for which the above referenced parking requirement cannot be met due to the unique conditions of a particular parcel of property, off-street parking spaces of the public type may be considered toward the requirements necessary to comply with the Article upon determination of the Director of Community Development and approval of the Planning Commission.

36-10 SIGNAGE

The maximum allowable square footage established in each zoning designation and/or overlay district shall apply as provided in each district. Said allowable area shall not be exceeded. In the event that channel letters, as defined in *Article 8, Definitions*, are proposed, then the maximum allowable square footage shall be calculated at a rate of eighty percent (80%) in lieu of the standard rate of one hundred percent (100%).

(a) Nonconformance:

Any sign in existence on the date of the adoption of this Ordinance that is not in conformance shall be considered a nonconforming sign and shall be permitted to continue to exist subject to the conditions and prohibitions set forth in the provisions of *Article 33, Sign Provisions*.

(b) Single-Use Building (A commercial building with one tenant):

Signs indicating the name of a business or retail use permitted in this District with a single-use building shall have one (1) sign not to exceed fifteen (15) square feet in area per face, five (5) feet in height, of the ground sign or pylon type, and have two (2) faces.

Each establishment of a business or retail use permitted in this District with a single-use building may acquire an additional permit for a wall-mounted sign of a size not to exceed ten percent (10%) of the surface frontal area of its building or portion of the building. Signs mounted on mansards, marquees, windows, and awnings are deemed to be wall signs.

(c) Multi-Use Building (A commercial building which houses more than one commercial tenant):

Signs indicating the name of a business or retail use permitted in this District with a multi-use building shall have one (1) sign not to exceed thirty-two (32) square feet in area per face, ten (10) feet in height, of the ground sign or pylon type, and have two (2) faces.

Each establishment of a business or retail use permitted in this District with a multi-use building may acquire an additional permit for a wall-mounted sign of a size not to exceed ten percent (10%) of the surface frontal area of its building or portion of building. Signs mounted on mansards, marquees, windows, and awnings are deemed to be wall signs.

(d) Fees:

Signs permitted under this Article shall require a permit as more specifically enumerated in *Article 33, Sign Provisions*. Fees for each permitted sign shall be as more specifically enumerated in *Article 34, Schedule of Fees.*

36-11 SIDEWALKS

A sidewalk of a minimum six (6) feet in width shall be required to be located adjacent to the front property line and in the interior of multi-use developments.

36-12 LANDSCAPE STANDARDS

(a) General Requirements:

Any use in this District shall suitably landscape at least five percent (5%) of the subject property and also comply with the requirements of *Article 19, Landscape and Tree Protection.*

Innovative landscape designs to include planters and/or hanging plants, as well as, a "natural cluster of trees" may be approved; if recommended by the Director of Community Development and given approval by the Planning Commission; if it is determined the landscape design is compatible with the character of the District.

More stringent design and landscape standards may be required if it is determined that the design would be more compatible with the development and more beneficial to the aesthetics of the City.

(b) Off-Street Parking Landscape Requirements:

The design and appearance of parking areas are intended to be compatible with the character of the community. Toward this objective, the following landscaping standards shall be observed in the construction of off-street parking areas:

(1) Landscaped areas and perimeter areas shall be so graded as to receive a reasonable portion of the rainfall from the surrounding pavement. Protective curbing around landscaped areas will leave openings for the flow of water onto unpaved areas.

(2) Landscaped areas shall be protected from vehicular encroachment by the use of curbing or wheel stops.

(3) The owner, tenant and/or agent, if any, shall be jointly and severally responsible for watering and maintaining all landscaping in a healthy, neat and orderly condition, replacing it when necessary, and keeping it free of refuse and debris.

(4) Adjacent residential property owners may jointly agree on the establishment of a common landscaped or fenced area between their properties which meet the requirements of this Article.

(c) Buffer Zone Requirements:

Where a business district abuts any part of a residential district, a buffer zone ten (10) feet in width shall be required. The buffer shall run the entire length of the abutting lot line(s). Under no circumstances shall this buffer impair vehicular flow and shall be part of the yard requirements. Said protection buffer shall be maintained in such a manner to accomplish its purpose continuously.

This District shall comply with the following minimum standards and said buffer zone shall be constructed of at least one of the following three (3) designs or a combination thereof as determined by the Director of Community Development and approved by the Planning Commission:

(1) Wall or Fence:

If a wall or fence of solid appearance is provided as a protection buffer, it shall be at least six (6) feet in height and of a construction and a design approved by the Planning Commission.

(2) Screen Planting Strip:

A staggered double row of Evergreen plantings at least ten (10) feet in width which will grow to at least ten (10) feet in height and spaced in a manner in which after three years it will provide an impervious visual barrier.

(3) Natural Forest:

A natural, undisturbed forest which provides a nearly impervious visual barrier due to the dense nature of the plants and/or trees. If this option is chosen, the width of the buffer zone shall be ten (10) feet in width and shall be included on the landscape plan.

The Director of Community Development shall determine whether the barrier is satisfactory via site inspection prior to approval.

36-13 SUPERVISION

The landscape architect shall be responsible for the supervision of all plantings. After completion, the landscape architect shall certify in writing to the City of Daphne that the submitted, approved landscape plan has been implemented and complies with the requirements of this Article.

36-14 CERTIFICATE OF OCCUPANCY

A certificate of occupancy shall not be issued until the submitted, approved landscape plan has been implemented or a bond has been posted. Said bond shall be in an amount equal to one hundred and fifty percent (150%) of the actual landscape cost which shall be certified by a professional landscape architect.

36-15 PENALTIES

The Code Enforcement Officer of the City of Daphne shall serve the owner of said property, each person, firm or corporation engaged in the activities regulated hereunder in which the activities are being conducted in violation of any provision of this Article with a Summons and Complaint citation. The person(s) shall be fined upon conviction, not less than twenty-five dollars ($25.00) nor more than five hundred dollars ($500.00) and costs of the court for each offense.

36-16 SETBACKS

MINIMUM DISTRICT REQUIREMENTS

DISTRICT	FRONT YARD	REAR YARD	SIDE YARD	CORNER LOT SIDE YARD
R-4, Single Family or R-6(G)	15	20	6	25
R-4, Multi-Family or R-7(A, T or M) or MU	15	20	a	25
B-1, Local Business	10	b	b	25
B-2, General Business	10	b	b	25
B-3, Professional Business	10	b	b	25

(a) When dwelling unit faces the side yard, the dwelling unit shall not be less than twenty-five (25) feet from the side lot line.

(b) None. If there is a rear alley, the setback shall be twenty-five (25) feet. When abutting a residential district it shall be not less than ten (10) feet. (See Buffer Requirements, § 36-12).

36-17 MAXIMUM BUILDING HEIGHT

Except as otherwise provided herein, no structure shall exceed thirty-five (35) feet in height in any R-4, Single Family and Multi-Family Residential, district or more than 50 (fifty) feet in height in any Business or Mixed-Use District. Structures of more than fifty (50) feet may be permitted subject to the approval of the City Council (See Definition of Height, Building in *Article 8, Definition of Terms*).

36-18 DRAINAGE

Any use in this District shall comply with *Article 18, Drainage and Stormwater Management.*

36-19 SUBDIVISION REGULATIONS

Any use in this District shall comply with *Article 17, Procedures for Subdivision Review* where applicable.

36-20 DISTRICT MAP

The Village Overlay District Map, Exhibit C, is hereby adopted and as a part of this Ordinance. (See Appendix).

ARTICLE XXXVII

EASTERN SHORE PARK OVERLAY DISTRICT
GENERAL PROVISIONS

37-1 CREATION OF OVERLAY DISTRICT

The City of Daphne, Alabama, a municipal corporation (the "City") hereby adopts the following provisions for the establishment of the Eastern Shore Park Overlay District (the "District"), said provisions to constitute Article 37 (the "District Regulations") of the Land Use and Development Ordinance of the City (the "Land Use Ordinance"). No building, other improvements or land shall hereafter be used or occupied, and no building or other improvements shall be erected, constructed, moved, or altered in the District, except in conformity with the District Regulations as the same may be amended from time to time.

The land constituting the District is described in Schedule "A" attached hereto. In the event Malbis Properties, L.L.C. (the "owner/developer") acquires any portion of that land adjacent to the District and described in Exhibit "B" attached hereto, on or before January 1, 2006, then any such additional acquired land described in Exhibit "B" shall become part of the District and subject to the District Regulations without further action by the City or the owner/developer.
(See also §37-16.)

37-2 MINIMUM STREET REQUIREMENTS

	Major Street	Collector Street	Local Street	Cul-de-Sac (Turn around)	Alley
Minimum Right-of-Way:	100′	60′	50′	50′ (100′ diam.)	30′
Minimum Pavement: As Req′d	36′	27′	28′	20′ (80′ diam.)	20′
Maximum Grade:	3%	5%	5%	5%	5%
Minimum Angle of Intersection in degrees:	80◦	60◦	60◦	60◦	60◦
Minimum Curb Radius at Intersection:	40′	30′	15′	15′	15′
Minimum Horizontal Curve Radius:	300′	250′	100′	100′	100′
Minimum Reverse Curve Tangent:	100′	100′	100′	100′	100′

Notes:

1 Cul-de-sacs shall not be longer than six hundred (600) feet measured from the centerline of the intersecting street to the center of the turnaround.

2 Minimum pavement width is measured from back of curb to back of curb.

3 Maximum grade may vary with topography subject to Planning Commission approval based on recommendation of Director of Community Development.

37-3 IMPROVEMENT STANDARDS

All streets in the District, whether private or dedicated for public use, shall be paved and adequately drained.

The full width of any public road improvements in the District shall be graded, including the subgrade of the areas to be paved. This requirement may be modified for the purpose of preserving the natural beauty of an area. A base course consisting of at least eight (8) inches of a sand-clay mixture with one hundred percent (100%) standard compaction shall be laid on a soundly prepared subgrade. A prime coat shall be sprayed uniformly over the base course. An approved type wearing surface in conformance with State Highway Standard 416-A one and one-half (1-1/2) inches thick compacted shall be laid over the prime coat. If curbs and gutters are required, they must be in conformity with approved State and County Highway Department standards.

All grading in the subdivision shall be related to the topography and environmental features of the surrounding area. Unpaved areas within a dedicated street right-of-way shall also be graded and shall be seeded in a manner that enhances the appearance of the environment.

All water mains, sanitary sewers and laterals, and storm sewers shall be installed as necessary to prevent the future cutting of the pavement of any street, sidewalk, or other required pavement.

37-4 ISSUANCE OF SITE DISTURBANCE PERMIT

Each person, firm, corporation, utility, entity, or agent thereof engaged in any site preparation and/or construction activities shall acquire a Site Disturbance Permit from the Planning Department prior to commencement of such activities pursuant to the provisions of this Article and no such activity shall commence prior to the approval of a preliminary plat by the Planning Commission. Fees for said permit shall be as more specifically enumerated in *Article 34 of the Land Use Ordinance, entitled "Schedule of Fees."*

37-5 INSPECTION OF IMPROVEMENTS

When all required improvements are installed, the developer/owner shall call for a final inspection. The Public Work Director or his duly authorized representative shall inspect the site to determine if the required improvements are satisfactorily installed according to the plans and specifications.

To determine if the streets are installed to minimum design standards, the City shall select an independent testing laboratory to make the necessary tests. These tests shall be conducted at the expense of the developer/owner.

37-6 SIDEWALKS

It is the intent of this section to require sidewalks to be installed on both sides as a part of the improvement of all streets prior to the issuance of Certificate of Occupancy.

Construction of sidewalks shall comply with the following standard:

Sidewalk width 5 feet

37-7 WATER AND SEWER CONNECTIONS

Developments, individual lots, or parcels shall be properly connected to a public community water and public sanitary sewer system.

37-8 SPECIAL PROVISIONS

(a) Utility Placement:

Water, sewer, gas, electric power, telephone, cable television, and other utility lines shall be installed underground by the developer and/or owner in all new commercial or industrial developments, expansions and/or renovations of existing development. Said developments shall be connected to a central distribution system, unless for good reasons other than cost, the Planning Commission approved a modification or waiver of this requirement in part or in whole, or if a special condition requires otherwise.

(b) Location of Roadway Fire Hydrants:

Roadway fire hydrants shall be installed along each street at the center of each block and at one corner of each roadway intersection, provided, however, that in no event shall fire hydrants be spaced so that any fire hydrant is located more than five hundred feet from another fire hydrant. The water supply and pressure shall be sufficient to provide adequate fire protection and the future needs of the intended land use. Additional fire hydrant placement may be required on the interior of developed lots pursuant to local ordinance and fire regulations as adopted by the City.

(c) Location of Street Lighting:

Lighting shall be installed at all intersections, curves, and cul-de-sacs. If additional lighting is consistent with safety and other community needs is deemed necessary, the Director of Community Development shall require the developer to present a street lighting plan developed in conjunction with the appropriate utility company having jurisdiction within the area.

(d) Placement of Street Signs:

Appropriate permanent type street name signs shall be placed at all intersections within the subdivision. The developer may select signs which will be in keeping with the theme of the development, subject to approval of the Director of Community Development.

37-9 DISTRICT REQUIREMENTS

The following limitations and requirements are hereby placed on uses in the District.

(a) Table of Permitted Uses, Compliance with District Requirements and Setbacks:

The permitted uses in the District are as provided in §13-2, §13-3, and §13-6 of *Article 13, Minimum District Requirements* of the Land Use Ordinance. Furthermore, the outdoor display of merchandise is permitted by the operator of a store, provided that the outdoor areas for such activities are limited to off-street parking areas and sidewalks in the District. Any outdoors sales for special events shall require a special permit issued by the City.

(b) Maximum Building Height:

Structures of more than five (5) stories or sixty-five (65) feet are not permitted.

(c) Performance Standards for the District:

All lots in the District, and improvements thereon, shall comply with the following minimum standards:

1. Lots shall be of sufficient size to be used for the purpose intended, provide adequate parking and loading facilities in addition to space required for conduct of other operation of the business, and otherwise comply with the provisions provided herein.

2. No entrances or exits shall direct traffic into adjacent residential districts.

3. Noise, air pollutants including dust emissions, and surface runoff shall not to exceed background levels by more than ten percent (10%).

4. Uses in all business districts must comply with all applicable health and safety standards, including sanitary facilities, paved and

landscaped parking areas, and other requirements of this Ordinance, as well as, State and Federal regulations.

5. Non-permanent structures such as trailers, sheds, and other such buildings used for business purposes may for business purposes may be permitted in business districts, provided, however, that such structures may only be located at the rear and side of permanent structures and must be adequately screened by landscaped buffers or opaque fencing.

37-10 PROCEDURES FOR SITE PLAN REVIEW

USE AND APPLICABILITY

The District Regulations shall be complied with for all development in the District, regardless of whether such development involves the construction of business and commercial structures, additions thereto, construction of a park, public rights-of-way, open space, public building or structure, or public utility, whether publicly or privately owned, and other uses as required by the Planning Commission.

SPECIAL PROVISIONS

The following shall apply:

(a) A site plan review shall be accomplished by the recommendation of the Director of Community Development and approval of the Planning Commission to assure compliance with the provisions of these District Regulations, as well as applicable building and fire codes.

(b) Said approval shall be authorization to begin work, subject to the issuance of a Site Disturbance Permit. Such approval shall become void upon one (1) year from the date of approval if a site disturbance permit has been acquired and no building or construction activities have occurred on the permitted site.

(c) When all required improvements are installed, the developer/owner shall call for a final inspection. The Director of Community Development or his duly authorized representative shall inspect the site to determine if the required improvements are satisfactorily installed according to the plans and specifications.

(d) Applicant shall be responsible for posting a sign providing public notice of site plan review. Failure to post said sign fifteen (15) days prior to Planning Commission review, shall cause the application to be withdrawn from the meeting agenda. Said sign shall not be an advertisement sign for the proposed project, but an advertisement of the Planning Commission

meeting dates and times in accordance with the standards established for such provided in the Supplemental Information.

PLAN CONTENT

The plan shall contain all information as reflected on the current departmental checklist for a site which may be modified at the discretion of the Director of Community Development when applicable.

WAIVER

The Director of Community Development may waive certain requirements contained in this Article if, in his opinion, the requirements are not essential to a proper decision on the proposed development; or, he may supplement the list with other requirements deemed necessary to clarify the nature of the proposed development.

ISSUANCE OF SITE DISTURBANCE PERMIT

Each person, firm, corporation, utility, entity or agent thereof engaged in any site preparation and/or construction activities shall acquire a Site Disturbance Permit from the Planning Department prior to commencement of such activities as established pursuant to the provisions of this Article and no such activity shall commence prior to the approval of a site plan by the Planning Commission. Fees for said permit shall be as more specifically enumerated in *Article 34 of the Land Use Ordinance, entitled the Schedule of Fees.*

REQUIREMENT OF BOND

Whenever a person, firm, corporation, developer or other entity proposes to develop a commercial site that, in the opinion of the Director of Community Development, constitutes a land disturbing activity which may pose a risk of drainage and/or siltation damage outside the boundaries of the project, such person, firm, corporation, developer or other entity conducting the land disturbing activity shall be required to submit a performance bond to the City prior to the issuance of a site disturbance permit.

At the time of approval of the site plan by the Planning Commission, the bond shall become effective and shall extend for a period of at least two (2) years following the issuance of the Certificate of Occupancy by the City. The bond shall be in the amount of ten percent (10%) of the total cost for the performance of all site work on the said location with bond to cover such drainage, erosion and siltation damage, if any.

The Director of Community Development or other administrative official as designated by the City Council shall determine the prescribed bond, as well as the adequacy and the security thereon.

RELEASE OF BOND

At the expiration of two (2) years from the issuance of the Certificate of Occupancy, the Director of Community Development shall determine if the drainage design implementation of the project has:

(a) Been performed in accordance and functions within the parameters of the design standards as set forth by the project engineer;

(b) Received from the project engineer a Certificate of Performance which states the drainage functions have been constructed in substantial accordance with the plans, specifications, and engineering guidelines;

(c) Had any material adverse impact on any streams, waterways or third parties; and,

(d) Complied with all ADEM regulations in effect at the time of said completion.

Upon the Director of Community Development's receipt and evaluation thereof of the criteria as enumerated above and upon recommendation of the Planning Commission, the City shall release the developer and/or the bondholder from further obligations under said bond.

If it is determined that the requirements have not been met then the bond may be extended for one six (6) month interval to allow the developer and/or bondholder additional time to correct the deficiencies which prohibited the release of bond. If a site contractor is unable and/or unwilling to satisfy the deficiencies as enumerated by the Director of Community Development, the bond shall be forfeited with the bond being payable to the City for the direction of such work and/or activities necessary for the completion of the improvements. The developer and/or bondholder of the property thereof shall be liable for any additional cost incurred.

ISSUANCE OF BUILDING PERMIT

Upon approval of the site plan, either as submitted or with changes and/or special conditions required by the Planning Commission, the Building Official may issue a building permit for a portion or all of the proposed development provided the application is in compliance with all applicable City, County, as well as State and Federal requirements.

37-11 PARKING REQUIREMENTS FOR OVERLAY DISTRICT

GENERAL

Off-street automobile storage or parking space shall be provided with vehicular access to a street or alley. Parking shall comply with the minimum requirements noted.

PARKING SCHEDULE

(a)	Land Use on Lot:	Parking Requirements
	Dwellings:	
	Hotels/Motels: Without restaurants, lounges, and banquet facilities	One (1) for each bedroom
	(With in-house restaurants, convention/meeting capabilities):	One and one-half banquet facilities, or one and a half (1.5) spaces for each guest bedroom
(b)	Public Assembly:	
	(1) Theaters, Auditoriums, Coliseums, Stadiums, and Similar Places of Assembly:	One (1) space for each four (4) seats
	Health Facilities:	
(c)	(1) Hospitals, Sanitariums, Nursing Homes, Homes for the Aged and Similar uses:	One (1) space for each four (4) beds, plus one (1) space for each employee on the maximum shift.
	(2) Kennels and Animal Hospitals	A parking area equal to thirty (30) percent of the total enclosed or covered area.
	(3) Medical, Dental and Health Offices and Clinics:	One (1) space for each two hundred (200) square feet of floor area used for offices and similar purposes.
	(4) Mortuaries and Funeral Parlors	Ten (10) spaces per parlor, chapel unit or one

(d) Business: (1) Restaurants (including bars, grills, diners, cafes, taverns, night clubs, lunch counters, and all similar dining and/or drinking establishments)	Ten (10) parking spaces for each one thousand (1,000) square feet of floor area.
(2) Commercial and Shopping Centers:	One (1) space per two hundred fifty (250) square feet of floor area.
(e) Uses Not Listed Above	Four and one-half (4.5) parking spaces per one thousand (1,000) square feet of floor area.
CALCULATION OF FLOOR AREA*: In the calculation of floor area to determine parking ratios, the term "floor area" shall mean enclosed areas which are heated and cooled.*	Expressly excluded from this term are garden center floor areas and outdoor storage areas or outdoor sales areas.

DESIGN STANDARDS

(a) Definition:

An off-street parking space is an all-weather surfaced area not in a street or alley, permanently reserved for the temporary storage of one automobile and connected with a street or alley by an all-weather surfaced driveway which affords unobstructed ingress and egress to each space.

(b) Parking Area Dimensions:

The design and dimensions of the standard parking area shall have a minimum nominal dimension of eighteen (18) feet in depth and nine (9) feet in width.

The design and dimension of handicap parking areas shall be in accordance with the Americans with Disabilities Act.

(c) Width of Two-Way Access Driveways:

The minimum width of two-way access driveways within parking areas shall be twenty-four (24) feet.

(d) Paving Standards: Parking spaces and driveways shall be paved to the standards established by the City.

(e) Drainage:

Off-street parking facilities shall be drained to prevent damage to abutting property and streets and to prevent pollutants from draining onto such streets and the adjacent lots. Landscape and perimeter areas shall be so graded as to direct runoff to the storm drainage system. The storm drainage system shall be designed to include water quality measures for the first one (1) inch of rainfall.

(f) Off-Street Loading and Unloading Space:

Off-street loading/unloading spaces shall be provided as hereinafter required by these District Regulations.

(1) Size of Spaces:

Each off-street loading/unloading space shall have minimum dimensions of fourteen (14) feet in height, twelve (12) feet in width, and fifty-five (55) feet in length.

However, upon sufficient demonstration a particular loading space will be used exclusively by shorter trucks, the Planning Commission may reduce the minimum length accordingly to as much as thirty-five (35) feet.

(2) Connection to Street or Alley:

Each required off-street loading and unloading space shall have direct access to a street or alley or have a driveway which offers satisfactory ingress and egress for trucks.

(3) Floor Area More Than Ten Thousand (10,000) Square Feet:

There shall be provided for each commercial building, or similar use requiring the receipt of distribution of materials or merchandise and having a floor area of more than ten thousand (10,000) square feet, at least one (1) off-street loading and unloading space. Such space shall be so located as not to hinder the free movement of pedestrians and vehicles over a sidewalk, street, or alley.

(4) Location:

All required off-street loading and unloading spaces shall be located on the same lot as the building which they are intended to serve or on an adjacent lot when shared with the user occupying said adjacent lot.

37-12 SUBDIVISION REGULATIONS

Article 17, Procedures for Subdivision Review, of the Land Use Ordinance is incorporated herein by reference.

37-13 DRAINAGE AND EROSION CONTROL REQUIREMENTS

Article 18, Drainage and Stormwater Management Facilities and Erosion/Sediment Control, of the Land Use Ordinance is incorporated herein by reference.

37-14 LANDSCAPE AND TREE PROTECTION

PURPOSE

The intent of this Section is to establish minimum standards for the provision, installation, and maintenance of landscape plantings and trees in order to achieve a healthy, beautiful, and safe community.

APPLICABILITY AND USE

(a) Applicability:

The provisions of this Article apply to all projects within the District involving the construction of business and commercial structures, all existing structures which increases the gross floor area by thirty (30) percent or more, and other projects as required by the Planning Commission.

(b) Use or Ownership Provision:

In the event of a change in: (a) use of property, (b) occupancy, or (c) ownership regardless of name change to any business, commercial, or industrial development, it shall be the responsibility of the owner to comply with the provisions of this Article within one hundred and eighty (180) days from the date in which the change occurs.

LANDSCAPE STANDARDS

(a) Site Plan Review:

A site plan shall not be approved by the Planning Commission without an acceptable landscape and irrigation plan.

(b) Subdivision Review:

A subdivision shall not be approved by the Planning Commission without an acceptable landscape and irrigation plan, as the same is defined pursuant to the provisions of this Section of the District Regulations.

All subdivisions shall require a landscape plan for the common areas of the subdivision: the entrance, detention pond, and other areas which are deemed appropriate by the Planning Commission.

(c) Interstate 10 North Landscaping

To the extent the City has authority to do so, it authorizes the developer/owner to remove all trees in that portion of Interstate 10 which is north of the northern boundary of the District. Such removal is conditioned upon the following:

(1) The prior submission to and approval by the Planning Commission of a landscaping plan prepared by the developer/owner;

(2) Obtaining any necessary permits from the Alabama Department of Transportation for the installation of landscaping improvements within the area from which trees are removed; and,

(3) The developer/owner's installation of the landscaping improvements according to the approved landscaping plan. Upon developer/owner's installation of the landscaping improvements according to the approved landscaping plan, the City shall assume the maintenance of said landscaping improvements in accordance with the approved landscaping plan and in compliance with any maintenance requirements of the Alabama Department of Transportation and any other applicable governmental entity.

Each owner of real property, its successors and or assigns in the district abutting any portion of Interstate 10 having landscaping installed pursuant to this Section, shall be obligated to reimburse the City on a semi-annual basis for the City's Public Works Department cost of maintaining that portion of the owner's real property fronting the Interstate. The City shall remit invoice to each such owner with payment due within forty-five (45) days of invoice.

Should each owner not pay said invoice within the time frame herein, the City shall have the right to charge interest at the State of Alabama statutory post judgment interest rate and the City shall further have the right to initiate appropriate civil action in such Court having competent jurisdiction to recover said costs, plus

reimbursement of reasonable attorney fees and cost associated herewith. The obtaining of any necessary permits from the Alabama Department of Transportation for the installation of landscaping improvements shall be the responsibility of the developer/owner.

(d) Revisions to Landscape Plan:

If proposed construction shall cause changes in the landscape or irrigation plan, a revised plan shall be submitted to the Director of Community Development for re-evaluation.

(e) Issuance of Site Disturbance Permit:

A landscape and irrigation plan shall be submitted for review by and the recommendation or other comments of the Director of Community Development and shall be subject to the approval of the Planning Commission prior to the issuance of a Site Disturbance Permit.

(f) Compliance with Landscape Provisions:

All subject properties, as well as those owned by the City, shall comply with the provisions of this Article.

(g) Certification and Plan Requirements:
Landscape plans shall be drawn and stamped by a licensed landscape architect. The landscape plan shall be of professional quality and include the following:

(1) Date, scale, north arrow, title, and names and contact information for property owner(s), developer, and the landscape architect.

(2) Location of existing boundary line dimensions of the building site, existing water sources, significant drainage features, existing and proposed streets or alleys, existing or proposed utility easements on or adjacent to the building site, rights-of-way, setbacks, locations of proposed parking spaces, and location of existing and/or proposed sidewalks.

(3) The location(s) and dimension(s) of the proposed landscaped areas within the parking area(s) including a description of new trees and plant materials to be placed within landscaped area(s). Both common and botanical names shall be included.

(4) Locations, type, and design of the proposed irrigation system.

(5) Location and species of buffer zone vegetation.

(h) Certification by Local Landscape Architect:

Any and all landscape plans as required in this Section shall, in addition to any other requirements, be reviewed and approved by a local landscape architect to be designated by the Planning Commission with the professional costs for such services to be reimbursed to the City by the party submitting the plans for approval. Such local landscape architect's review shall include the design, irrigation, location and type of planting, and any and all other criteria necessary so as to ensure that the planting and design is consistent with local standards.

If the local landscape architect's review fee is known at the time of the plan's submission, the submitting party shall pay the fee upon submission. Otherwise, the fee shall be paid by the submitting party within ten (10) days of receipt of a statement of the amount of the fee.

BUFFER ZONE REQUIREMENTS

Where a business district in the District abuts, without any intervening public road right-of-way, any part of an adjoining residential area, a buffer zone twenty (20) feet wide shall be required.

The buffer shall run the entire length of the abutting lot line(s). Under no circumstances shall this buffer impair vehicular flow and shall be part of the yard requirements. Said protection buffer shall be maintained in such a manner to accomplish its purpose continuously. This District shall comply with the following minimum standards and said buffer zone shall be constructed of at least one of the following three (3) designs or a combination thereof as determined by the Director of Community Development and approved by the Planning Commission:

(a) Wall or Fence:
If a wall or fence of solid appearance is provided as a protection buffer, it shall be at least six (6) feet in height and of a construction and a design recommended and approved by the Planning Commission.

(b) Screen Planting Strip:

A staggered double row of evergreen plantings at least ten (10) feet in width which will grow to at least ten (10) feet in height and spaced in a manner in which after three years it will provide an impervious visual barrier.

(c) Natural Forest:

Natural, undisturbed forest which provides a nearly impervious visual barrier due to the dense nature of the plants and/or trees. If this option is chosen, the width of the buffer zone shall be twenty-five (25) feet and shall be shown on the landscape plan. The Director of Community Development shall determine whether the barrier is satisfactory via site inspection prior to approval.

OFF-STREET PARKING FACILITIES

The design and appearance of parking areas are intended to be compatible with the character of the community. Toward this objective, the following landscaping standards shall be observed in the construction of off-street parking areas which accommodate six (6) or more parking spaces:

(a) At least fifteen percent (15%) of the total lot area intended for off-street parking shall be suitably landscaped.

(b) Interior portions of the parking area at intervals of twelve (12) parking spaces shall be broken by provision of landscaped islands. Such landscape islands shall include the placement of shade or flowering trees at least two and one-half (2-½) inches or greater in caliper and ten (10) feet in height at planting.

(c) Each separate landscaped area must be a minimum of two hundred eighty (280) square feet if it is to be counted toward the minimum landscaped area requirements.

(d) Landscaped areas shall be protected from vehicular encroachment by the use of curbing or wheel stops.

(e) The owner, tenant and/or agent, if any, shall be jointly and severally responsible for watering and maintaining all landscaping in a healthy, neat and orderly condition, replacing it when necessary, and keeping it free of refuse and debris.

(f) A minimum of five (5) feet side and rear landscaping may be required in the landscape plan depending on the topography and arrangement of parking facilities.

If required, such areas shall be planted with a combination of trees, shrubs, and grass or other ground cover adequate to break the expanse of contiguous parking areas and to present an attractive appearance as determined by the Director of Community Development.

(g) Innovative landscape designs using "natural cluster of trees" rather than the required one (1) tree at intervals of twelve (12) parking spaces may be used if approved by the Planning Commission.

37-15 SIGN PROVISIONS

A. SIGNS PROHIBITED IN THIS DISTRICT

The following signs are prohibited:

(a) Prohibited Placement:

Any sign erected or painted upon a sloped roof, fence, tree, stand pipe, fire escape, or utility pole is prohibited, except that a manufacturer's or installer's ID plate shall be permitted, provided that such plate does not exceed 5 x 8 inches in size.

(b) Prohibited Wording:

Any sign which is not a traffic control sign and uses the word "Stop" or "Danger" prominently displayed and/or which is a copy or imitation of official traffic control signs is prohibited.

(c) Flashing Signs Prohibited:

(1) General Prohibition:

Except as otherwise provided below, flashing signs, signs which contain intermittent illuminations and digital LED signs/reader boards are prohibited.

(2) Exceptions:

This subsection does not prohibit the following:

(a) Signs required for traffic control; and,

(b) Signs which exhibit time, date, temperature, and other customary public information.

(d) Prohibited Sign Types:

Portable signs, bench signs, snipe signs, sandwich signs, except as allowed in *Article 33, Sign Provisions* of the Land Use Ordinance, ladder-type signs, billboard signs or off-premises signs. "*Billboard*" is defined as "an off-premises or off-site sign advertising an establishment, merchandise, product, service, or entertainment which is not sold, provided, manufactured, or furnished on the property on which said sign is located." "*Off-premises sign*" is defined as "a billboard or other sign on which any portion thereof relates to a premises (or activities thereon) other than the property on which said sign is located."

(e) Prohibited Sign Effects:

Signs which produce sound, noise, cause interference with radio, telephone, television or other communication transmission, produce or reflect motion pictures; emit visible smoke, vapor, particles, odor, are animated, or produce any rotation, motion, or movement.

(f) Illuminated Tubing:

(1) General Prohibition:

Illuminated tubing or strings of lights that outline property lines, sales area, roof lines, doors, windows, wall edges, similar areas or other architectural features of a building are prohibited.

(2) Exception:

This prohibition shall not apply to temporary displays erected in connection with holiday decorations and community decorations.

B. PERMITTED SIGNS

The following signs are permitted, subject to review by the Planning Commission to determine compliance with the sign criteria provided below in this §15(B) and further subject to the requirement that permitted signs shall have internal illumination only.

The maximum allowable square footage established in each zoning designation and/or overlay district shall apply as provided in each district. Said allowable area shall not be exceeded. In the event that channel letters, as defined in *Article 8, Definitions,* are proposed, then the maximum allowable square footage shall be calculated at a rate of eighty percent (80%) in lieu of the standard rate of one hundred percent (100%).

(a) Monument and Pylon Signs:

Except as otherwise provided in these District Regulations, the following monument and pylon signs are permitted in the District.

(b) District Interstate Pylon Sign:

The developer/owner is permitted to install and maintain one (1) pylon sign at or near the Northeastern boundary of the District. This sign is permitted to have panels for multiple businesses in the District, provided that the panel space on each side of the District Interstate Pylon Sign shall not exceed one thousand two hundred (1,200) square feet in the aggregate and no individual panel shall have more than three hundred and fifty (350) square feet or less than one hundred and fifty (150) square feet per side. The height of the Interstate Pylon Sign shall not exceed one hundred and twenty (120) feet and shall be determined based on a sight line study obtained by the developer/owner and approved by the Planning Commission.

The sight line study shall consider the topographical elevation of the location of the District Interstate Pylon Sign, the obstruction to the sign panels by trees and the Interstate 10 overpass at the northeast corner of the District, so as to insure that the top panel on the sign is visible traveling in both directions on Interstate 10.

Each lot in the District which borders Interstate 10 and either (A) has at least five hundred (500) front feet on Interstate 10, or (B) is located at the intersection of Interstate 10 and Alabama Highway 181, shall be permitted one (1) pylon sign at or near said lot's common boundary with Interstate 10.

Permitted individual lot interstate signs are not to exceed fifteen (15) feet in width, or forty-five (45) feet in height, and shall have a maximum area of three hundred (300) square feet per face. Lots in the District which border Interstate 10, other than those described immediately above, may not have such an individual lot pylon sign without a variance from the Board of Zoning Adjustments.

(c) Development Signs:

One (1) sign is permitted on Alabama Highway 181 and one (1) sign on U.S. Highway 90 identifying the development. Each side may also have panels beneath the development identification not exceeding one hundred and fifty (150) square feet each for multiple businesses within the District. Each sign shall not exceed thirty (30) feet in height.

(d) Monument Signs:

Each lot having frontage on Alabama Highway 181, U.S. Highway 90, or any other public road or right-of-way within or abutting the District shall be permitted to have one (1) monument sign for each public road right of way which the lot abuts. The sign shall be placed perpendicular to the said highways and/or boulevards. The permitted sign shall not exceed fifty (50) square feet per face if the lot's frontage on the public road right-of-way is three hundred (300) feet or less, and shall not exceed one hundred (100) square foot per face if the lot's frontage on the public road right of way exceeds three hundred (300) feet. All monument signs shall have a pedestal and shall not exceed twenty-one (21) feet in height (including the pedestal).

No sign which qualifies under this definition shall be construed to have any supportive structure and/or structural elements of the sign bearing no advertising matter that would be exempt from calculating the square footage dimensions of the sign. The entire dimensions of the monument itself shall be computed for the maximum square footage per face allotted.

(e) Directional Signs:

Directional Signs shall be permitted at the intersection of all roads in the District. Directional Signs shall not exceed sixteen (16) square feet per face.

(f) Wall-Mounted Signs:

Each establishment in a shopping center or each business premises in B-1, Local Business, B-2, General Business, B-3, Professional, and C/I, Commercial/Industrial districts may acquire an additional permit for a wall-mounted sign of a size not to exceed the lesser of three hundred fifty (350) square feet or thirty (30) percent of the surface frontal area of the building. Signs mounted on mansards, marquees, and awnings are deemed to be wall signs.

A business establishment with over forty thousand (40,000) square feet of building area may have on (1) additional wall-mounted sign of a size not to exceed one hundred (100) square feet for the purpose of advertising an accessory use.

A business with over one hundred thousand (100,000) square feet of building area may have two (2) additional wall-mounted signs of a size not to exceed one hundred (100) square feet each for the purpose of advertising accessory uses. No business establishment can have more than three (3) wall-mounted signs.

(g) Menu Type Signs:

One menu type sign per drive-thru window service not to exceed forty (40) square feet in area or eight (8) feet in height.

(h) Automobile Dealerships:

Automobile dealerships in the sale of the new vehicles shall be subject to the following:

(1) Numeric Limitation:

Each lot on which an automobile dealership operates shall be permitted the following:

(a) One (1) monument sign for each new automobile manufacturer line of cars offered on the lot, together with one (1) monument sign for used cars, if the same are for sale on the lot; and,

(b) Lots operated as automobile dealerships and have a common boundary with Interstate 10 are permitted to have one (1) pylon sign as provided in §15B above of these District Regulations.

(2) Height Limitation:

(a) The monument signs shall not exceed twenty-one (21) feet in height; and,

(b) Any pylon sign for lots adjoining Interstate 10 North shall not exceed forty-five (45) feet in height.

(i) Gasoline and Fuel Signs:

Gasoline or other motor vehicle fuel pricing signs, in addition to permitted name or identification signs, are permitted in any business or industrial district. Such signs shall not exceed twelve (12) square feet in area and must comply with the other applicable sign requirements for the District.

(j) New Construction Signs:

(1) General Provision:

Temporary non-illuminated signs not more than thirty-two (32) square feet in area, erected in connection with new construction

work and displayed on the premises during such time as the actual construction work is in progress. One (1) such sign, which shall not exceed ten (10) feet in height, is allowed for each street frontage. Such signs shall be removed upon completion of the project.

(2) Temporary Advertising Sign:

A temporary advertising sign will be permitted to the owner for the development for each individual business premises, shopping center premises, commercial/industrial business, subdivision, planned unit development, mobile home park and mobile home subdivision, provided the area of each sign shall not exceed thirty-two (32) square feet, is non-illuminated, and is within the confines of the development. These signs shall be the height no greater than ten (10) feet mounted from the ground, for no more than one (1) sign, either single or double faced, per street frontage.

(3) Temporary Promotional Banners:

Two (2) temporary signs or banners not exceeding fifty (50) square feet each in area and temporary decorative flags, bunting, pennants and streamers for recognizing grand openings are permitted. Said temporary banners shall be kept in good condition and shall be permitted no more than fourteen (14) days. Furthermore, decorative seasonal banners are permitted on light standards at all times, provided that the same are maintained in good condition.

(k) No sign, unless herein excepted, shall be erected, constructed, posted, painted, altered, maintained, or relocated, until a permit has been issued by the Code Enforcement Officer. Before any permit shall be issued an application prescribed forms, which shall indemnify and hold harmless the City of Daphne of all damages, all demands or expenses of every character which may in any manner be caused by the erection and use of said sign or sign structure, shall be filed together with drawings and specifications maybe necessary to fully advise and acquaint the Code Enforcement Officer with location, size, construction, materials, manner of illuminating, and securing or fastening, and number of size applied for in the wording of the sign or advertisement to be carried on the sign. A decision by the Code Enforcement Officer shall be made within thirty (30) calendar days from the date of when the application is received. Further an application for a business license shall be a prerequisite for applying for a sign permit.

37-16 DISTRICT MAP

The Eastern Shore Park Overlay District Map, Exhibit "D", is hereby adopted and as a part of this Ordinance, (See Appendix).

ARTICLE XXXVIII

RESIDENTIAL HIGH-RISE CONDOMINIUM DEVELOPMENT DISTRICT

38-1 PURPOSE

The intent of this district is to provide opportunity for High-Rise Condominium High Density urban type residential developments exceeding fifty (50) feet in height. The area is described as being located on the West side of U.S. Highway 98, extending from the South side of Interstate 10, south to Van Buren Street.

38-2 HEIGHT EXCEPTIONS

The maximum livable height requirements does not include structures or other appurtenances such as screening, parapet walls, condensers or other mechanical apparatus, communication antennas necessary for the operation of the building. Mechanical equipment, chimneys, air conditioners, elevator penthouses, church spires and steeples, water towers, parapet walls and similar appurtenances are excluded from height restrictions. However, the exclusions apply only to those elements that are appurtenant to the structure. The excluded element shall not exceed the maximum height by more than fifteen (15) feet.

(a) Building height may be allowed up to two hundred (200) feet or sixteen (16) stories by the Planning Commission.

(b) Additional net area minimums and setbacks shall be required.

(c) International Building Code Standards, current edition, shall be required for buildings over fifty (50) feet.

38-3 SETBACKS

The minimum setbacks for structures shall not be less than fifty (50) feet or 0.5 (one half) feet to one (1) foot to building height ratio, which ever is greater, and calculated as follows:

High Rise Condominium Development
Minimum Setbacks

Height (ft)	Minimum Setback (ft)	Net Acres Minimum Net Buildable Acres Required (ac)
200	100	1.89
175	87.5	1.57
150	75	1.29
125	62.5	1.03
100	50	0.80
75	50	0.80
50	50	0.80

38-4 ADDITIONAL REQUIREMENTS

(a) Not less than two (2) parking spaces per dwelling unit.

(b) Any use in this district shall set aside at least twenty percent (20%) of the area to be used as a landscaped and green area.

(c) Additional buffers may be required for the protection of streams, rivers, watersheds, wetlands or the like. See *Article 18, Drainage and Stormwater*.

38-5 WATER AND SEWER CONNECTIONS

(a) Developments, individual lots, or parcels shall be properly connected to a public or private community water and sanitary sewer system. Residential High Rise Developments shall not be approved unless the appropriate utility has the capacity to provide the required service.

(b) All Residential High-Rise structures shall be required to install a grease trap which is accessible for regular inspection and cleaning.

38-6 SIGN PROVISIONS

Signs shall be restricted to monument style signs. See *Article 33, Sign Provisions*. The maximum allowable square footage established in each zoning designation and/or overlay district shall apply as provided in each district. Said allowable area shall not be exceeded. In the event that channel letters, as defined in *Article 8, Definitions*, are proposed, then the maximum allowable square footage shall be calculated at a rate of eighty percent (80%) in lieu of the standard rate of one hundred percent (100%).

38-7 PARKING

(a) Underground parking facilities shall be required and shall not be counted in the height; however, ground level parking beneath the building shall be counted as a story.

i. Internal parking shall not exceed twenty-five percent (25%) of the structure height. There shall not be less than two (2) interior parking spaces per dwelling unit. Visitor parking may be provided outside of the building footprint.

(b) There shall be no overnight storage of travel trailers, motor homes, hauling trailers, boat trailers, boats, wrecked or disabled vehicles on the property. In no case may commercial vehicles used for hauling dangerous or hazardous products be parked or stored on premises. See *Article 16, Parking Requirements*, Storage and Parking of Trailer and Vehicles.

38-8 SIDEWALKS

Sidewalks within the “Gated Compounds” shall be provided and not be less than four (4) feet in width.

38-9 TRAFFIC IMPACT ANALYSIS

A traffic impact analysis shall be required for Residential High-Rise developments. The results and any corrective measures necessary shall be included as part of, and in addition to, the requirements for site plan review and approval.

38-10 ENVIRONMENTAL COMPATIBILITY

It is the intent of this section to ensure environmental compatibility of the proposed development with the natural environment. Additional buffers may be required for the protection of streams, rivers, watersheds, wetlands or the like. See Additional Requirements herein. Other requirements that may be considered by the Planning Commission may include, but not be limited to, reflective or specialized glass and lighting to serve as a flight path deterrent for migrating birds.

38-11 DISTRICT MAP

Residential High Rise Overlay District Map, Exhibit E is hereby adopted as a part of this Ordinance (See Appendix).

ARTICLE XXXIX

JUBILEE RETAIL DISTRICT OVERLAY

39-1 GENERAL PROVISIONS

(a) Purpose of the Jubilee Retail Overlay District:

Whereas the City of Daphne promotes a quality living environment that sustains a balanced mix of commercial development that serves the day-to-day needs of its residents and promotes its image as a desirable and economically stable community. The Jubilee Retail Overlay District is hereby created to recognize and reinforce the importance of the existing interstate retail business corridor as a major commercial center for the City of Daphne. The intent is to enhance and encourage the retention of existing businesses and the establishment of new entrepreneurial businesses along Interstate 10 as demonstrated in the Eastern Shore Park District Overlay.

(b) Boundaries:

The Jubilee Retail Overlay District is hereby established. The boundaries are as shown on the Jubilee Retail Overlay District Map and shall be considered an amendment to the Official Zoning Map of the City of Daphne. The map shall be amended in the same manner as any other zoning district permitted by the Land Use and Development Ordinance, and shall be amended in accordance with the provisions of *Article 3, Official Maps and Plans*.

This District shall be in addition to and shall overlay all other zoning districts where it is applied, so that any parcel of land lying in such an overlay district shall lie in one or more other zoning districts provided for by the Land Use and Development Ordinance.

39-2 DISTRICT REQUIREMENTS

The following zoning districts shall be allowed as established and most specifically defined in *Article 7, Establishment of Districts*: B-2, General Business and B-3, Professional Business.

(a) Permitted Uses:

Permitted uses in the District are as provided in *Article 35, Table of Permitted Uses*. *Article 35, Table of Permitted Uses and Conditions*, outlines the restrictions for each district. Furthermore, the outdoor display of merchandise is permitted by the operator of a store, provided that the outdoor areas for such

activities are limited to off-street parking areas and sidewalks in the District. Any outdoor sales for special events shall require a special permit issued by the City.

(b) Setbacks:

The following setback requirements shall apply in districts as outlined below.

MINIMUM ZONING DISTRICT SETBACK REQUIREMENTS

Zoning District	Front Yard (ft)			Rear Yard	Side Yard	Corner Lot [c] Side Yard (ft)	
	Arterial & Collector Streets	Local Streets & Service Roads	U.S., State or County Roads			Arterial & Collector Streets	Local Streets & Service Roads
B-2	30	20	100	a, b	a, b	30	25
B-3	30	20	100	a, b	a, b	30	25

Table Notes:

a. None, except it will be five (5) feet where abutting an alley, or where abutting a residential district it shall be at least thirty (30) feet.

b. Where a public or semi-public use abuts any part of a single family residential district, a buffer zone ten (10) feet wide shall be required. Where a commercial district abuts any part of a residential district a buffer zone of twenty (20) feet shall be required. Said buffer zone shall be designed in compliance with the provisions established in Section 19-10.

c. Lot Orientation**:** On corner lots the front yard shall be considered as parallel to the street upon which the lot has its least dimension.

(c) Maximum Building Height:

Structures of more than five (5) stories or sixty-five (65) feet shall not be permitted.

(d) Performance Standards for the District:

All lots in the District, and improvements thereon, shall comply with the following minimum standards:

(1) Lots shall be of sufficient size to be used for the purpose intended, provide adequate parking and loading facilities in addition to space required for conduct of other operations of the business, and otherwise comply with the provisions provided herein.

(2) No entrances or exits shall direct traffic into adjacent residential districts.

(3) Noise, air pollutants including dust emissions, and surface runoff shall not exceed background levels by more than ten percent (10%).

(4) Uses in all business districts must comply with all applicable health and safety standards, including sanitary facilities, paved and landscaped parking areas, and other requirements of this Ordinance, as well as, State and Federal regulations.

(5) Non-permanent structures such as trailers, sheds, and other such buildings used for business purposes may be permitted in business districts, provided, however, that such structures may only be located at the rear and side of permanent structures and must be adequately screened by landscaped buffers or opaque fencing.

(6) All dumpsters shall be enclosed on all four sides in order to conceal them from public view and screened from public view with an opaque fence or wall of permanent construction.

39-3 IMPROVEMENT STANDARDS

(a) All streets in the District, whether private or dedicated for public use, shall be paved and adequately drained.

(b) The full width of any public road improvements in the District shall be graded, including the subgrade of the areas to be paved. This requirement may be modified for the purpose of preserving the natural beauty of an area. A base course consisting of at least eight (8) inches of a sand-clay mixture with one hundred percent (100%) standard compaction shall be laid on a soundly prepared subgrade. A prime coat shall be sprayed uniformly over the base course. An approved type wearing surface compliant with State Highway Standard 416-A one and one-half (1-1/2) inches thick compacted shall be laid over the prime coat. If curbs and gutters are required, they must conform to approved State and County Highway Department standards.

(c) All grading in the subdivision shall be related to the topography and environmental features of the surrounding area. Unpaved areas within a dedicated street right-of-way shall also be graded and shall be seeded in a manner that enhances the appearance of the environment.

(d) All water mains, sanitary sewers and laterals, and storm sewers shall be installed as necessary to prevent the future cutting of the pavement of any street, sidewalk, or other required pavement.

39-4 MINIMUM STREET REQUIREMENTS

	Major Street	Collector Street	Local Street	Cul-de-Sac (Turnaround)	Alley
Minimum Right-of-Way:	100′	60′	50′	50′ (100′ diam.)	30′
Minimum Pavement: As Req′d	36′	27′	28′	20′ (80′ diam.)	20′
Maximum Grade:	3%	5%	5%	5%	5%
Minimum Angle of Intersection in Degrees:	80◦	60◦	60◦	60◦	60◦
Minimum Curb Radius at Intersection:	40′	30′	15′	15′	15′
Minimum Horizontal Curve Radius:	300′	250′	100′	100′	100′
Minimum Reverse Curve Tangent:	100′	100′	100′	100′	100′

Table Notes:
1. Cul-de-sacs shall not be longer than six hundred (600) feet measured from the centerline of the intersecting street to the center of the turnaround.
2. Minimum pavement width is measured from back of curb to back of curb.
3. Maximum grade may vary with topography subject to Planning Commission approval based on recommendation of Director of Public Works, Community Development or City Engineer.

39-5 SIDEWALKS & PEDESTRIAN WALKWAYS

It is the intent of this section to require the installation of five (5) feet wide concrete or asphalt sidewalks on both sides of the street in the District in order to encourage vehicles and pedestrian connectivity within the City of Daphne. Sidewalks are counted toward the improvement standards of all streets and shall be installed prior to the issuance of a Certificate of Occupancy unless an agreement for future installation has been presented to the City by the developer. In no case shall the City of Daphne be responsible for the installation of sidewalks within any subdivision development.

(a) Installation:

Sidewalks shall provide for pedestrian traffic and design thereof shall encourage safe means of access that minimize conflicts between vehicles and pedestrians. The use of pervious and/or permeable material or other innovative low impact design measures that promote may be considered by the Planning Commission in lieu of typical sidewalk installation. Due consideration shall be given to the practicality and feasibility of sidewalk installation depending upon the proposed development and the location. Except where exempted or modified by the Planning Commission, sidewalks shall be installed as follows:

(1) Along the perimeter of all developments where adjacent to City right-of-way.

(2) Along the right-of-way where adjacent to the perimeter of any common area within the development; except where walking trails and/or paths are incorporated into the design for formal/recreational open space as provided in *Article 11, Minimum Standards and Required Improvements*. No final plat shall be approved until this provision is satisfied.

(3) At the discretion of the Planning Commission, the subdivider(s)/developer(s) may be required to provide access through greenways and common areas by sidewalk or trail. In such an instance, a trail may be implemented in lieu of the installation of sidewalks or to augment the sidewalk system. The trail path and design shall be reviewed and approved by the Planning Commission. Said trail shall be no less than ten (10) feet wide and shall be composed of permeable, porous paving materials.

(4) Pedestrian crosswalks, not less than ten (10) feet wide, shall be required where deemed necessary to provide circulation or access to schools, playgrounds, shopping centers, bus stops, and other community facilities.

(5) For all new subdivisions, restrictive covenants, as are required in *Article 17, Subdivision Review,* shall provide for the installation sidewalks and/or trails by the developer.

(6) The Planning Commission may, at its discretion, approve a final plat prior to the installation of sidewalks upon receipt of an agreement to install sidewalks, a cost estimate for sidewalk installation and a surety in the amount of 200% of the estimated cost. Said surety shall not expire prior to a 24 month period.

39-6 WATER AND SEWER CONNECTIONS

All developments, individual lots, or parcels shall be properly connected to a public community water and public sanitary sewer system.

39-7 DRAINAGE AND EROSION CONTROL REQUIREMENTS

Article 18, Drainage and Storm Sewers, of the Land Use Ordinance is incorporated herein by reference.

39-8 SPECIAL PROVISIONS

(a) Utility Placement:

Water, sewer, gas, electric power, telephone, cable television, and other utility lines shall be installed underground by the developer and/or owner in all new commercial or industrial developments, expansions and/or renovations of existing development. Said developments shall be connected to a central distribution system, unless for good reasons other than cost, the Planning Commission approves a modification or waiver of this requirement in part or in whole, or if a special condition requires otherwise.

(b) Location of Roadway Fire Hydrants:

Roadway fire hydrants shall be installed along each street at the center of each block and at one corner of each roadway intersection, provided, however, that in no event shall fire hydrants be spaced so that any fire hydrant is located more than six hundred (600) feet from another fire hydrant. The water supply and pressure shall be sufficient to provide adequate fire protection and the future needs of the intended land use. Additional fire hydrant placement may be required on the interior of developed lots pursuant to local ordinance and fire regulations as adopted by the City.

(c) Location of Street Lighting:

Lighting shall be installed at all intersections, curves, and cul-de-sacs. If additional lighting is deemed necessary, the Director of Community Development shall require the developer to present a street lighting plan developed in conjunction with the appropriate utility company having jurisdiction within the area.

(d) Placement of Street Signs:

Appropriate permanent type street name signs shall be placed at all intersections within the subdivision. The developer may select signs consistent with the theme of the development, subject to approval of the Director of Community Development.

39-9 COMMENCEMENT OF CONSTRUCTION OR SITE DISTURBANCE

Each person, firm, corporation, utility, entity, or agent thereof engaged in any site preparation and/or construction activities shall acquire a Site Disturbance Permit from the Department of Community Development prior to commencement of such activities pursuant to the provisions of this Article and no such activity shall commence prior to the approval of either a preliminary plat or site plan as is applicable. Fees for said permit shall be as are more specifically enumerated in *Article 34, Schedule of Fees.*

39-10 FINAL INSPECTION OF IMPROVEMENTS

To ensure compliance with development regulations the project shall be inspected by all applicable entities prior to final approval by the City of Daphne. Under no circumstance shall the City be held liable for faulty workmanship, defects or improper engineering for private property.

Street Improvements:

To certify that streets are installed to minimum design standards, the developer/owner shall select an independent testing laboratory to perform necessary tests and submit test results to the Department of Community Development for prior to final inspection.

When all required improvements are installed and test results are submitted, the developer/owner shall call for a final inspection. Inspections shall be made in regard to the following: implementation of engineering design for stormwater management and related improvements, utility improvements, environmental stability, landscaping, compliance with Fire Code and Building Code standards.
All appropriate entities including but not limited to the Director of Community Development, Public Works, and/or the City Engineer or a duly authorized representative shall inspect the site to determine if the required improvements are satisfactorily installed according to the plans and specifications prior to final plat approval or issuance of a certificate of occupancy.

39-11 SUBDIVISION REGULATIONS

Article 17, Procedures for Subdivision Review, of the Land Use Ordinance is incorporated herein by reference.

39-12 PROCEDURES FOR SITE PLAN REVIEW

(a) Use and Applicability:

The District Regulations shall be complied with for all development in the District, regardless of whether such development involves the construction of business and commercial structures, additions thereto, construction of a park, public rights-of-way, open space, public building or structure, or public utility, whether publicly or privately owned, and other uses as required by the Planning Commission.

(b) Special Provisions:

The following shall apply:

(1) A site plan review shall be accomplished by the recommendation of the Director of Community Development and approval of the Planning Commission to assure compliance with the provisions of these District Regulations, as well as applicable building and fire codes.

(2) Said approval shall be authorization to begin work, subject to a pre-construction meeting and the issuance of a Site Disturbance Permit. Such approval shall become void upon one (1) year from the date of approval if a site disturbance permit has been acquired and no building or construction activities have occurred on the permitted site.

(3) When all required improvements are installed, the developer/owner shall call for a final inspection. The Director of Community Development, and/or the City Engineer and/or Director of Public Works or authorized representative shall inspect the site to determine if the required improvements are satisfactorily installed according to the plans and specifications.

(c) Plan Content:

The plan shall contain all information as reflected on the current departmental checklist for a site which may be modified at the discretion of the Director of Community Development when applicable.

(d) Reconsideration of Certain of Requirements:

The Director of Community Development may waive certain requirements contained in this Article if it is determined that the requirements are not essential to a proper decision on the proposed development; or, may supplement the list with other requirements deemed necessary to clarify the nature of the proposed development. The Director of Community Development may waive the requirement for a pre-construction conference if it is determined that the project would create minimum impact to the surrounding properties.

(e) Issuance of Site Disturbance Permit:

Each person, firm, corporation, utility, entity or agent thereof engaged in any site preparation and/or construction activities shall acquire a Site Disturbance Permit from the Department of Community Development prior to commencement of such activities as established pursuant to the provisions of this Article and no such activity shall commence prior to the approval of a site plan by the Planning Commission. Fees for said permit shall be as are more specifically enumerated in *Article 34, Schedule of Fees.*

(f) Issuance of Building Permit:

Upon approval of the site plan, either as submitted or with changes and/or special conditions required by the Planning Commission, the Building Official may issue a building permit for a portion or all of the proposed development provided the application is in compliance with all applicable City, County, as well as State and Federal requirements.

(g) Requirement of Bond:

Whenever a person, firm, corporation, developer or other entity proposes to develop a commercial site that, in the opinion of the City Engineer, Director of Community Development or Public Works, constitutes a land disturbing activity, which may pose a risk of drainage and/or siltation damage outside the boundaries of the project, such person, firm, corporation, developer or other entity conducting the land disturbing activity shall be required to submit a performance bond to the City prior to the issuance of a site disturbance permit.

At the time of approval of the site plan by the Planning Commission, the bond shall become effective and shall extend for a period of at least two (2) years following the issuance of the Certificate of Occupancy by the City. The bond shall be in the amount of ten percent (10%) of the total cost for the performance of all site work on the said location with bond to cover such drainage, erosion and siltation damage, if any.

The Director of Community Development or other administrative official as designated by the City Council shall determine the prescribed bond, as well as the adequacy and the security thereon.

(h) Release of Bond:

At the expiration of twenty four months from the issuance of the Certificate of Occupancy, the City Engineer, Director of Public Works shall determine if the drainage design implementation of the project has:

(1) Been performed in accordance and functions within the parameters of the design standards as set forth by the project engineer;

(2) Received from the project engineer a Certificate of Performance which states the drainage functions have been constructed in substantial accordance with the plans, specifications, and engineering guidelines;

(3) Had any material adverse impact on any streams, waterways or third parties; and,

(4) Complied with all ADEM regulations in effect at the time of said completion.

Upon the Director of Community Development's receipt and evaluation of the criteria as enumerated in this Section and upon recommendation of the Planning Commission, the City shall release the developer and/or the bondholder from further obligations under said bond.

If it is determined that the requirements of this Section have not been met then the bond may be extended for one six (6) month interval to allow the developer and/or bondholder additional time to correct the deficiencies which prohibited the release of the bond. If a site contractor is unable and/or unwilling to satisfy the deficiencies as enumerated by the City Engineer/Director of Public Works, the bond shall be forfeited with the bond being payable to the City for the direction of such work and/or activities necessary for the completion of the improvements. The developer and/or bondholder of the property thereof shall be liable for any additional cost incurred.

39-13 PARKING REQUIREMENTS FOR OVERLAY DISTRICTS

(a) General:

Off-street automobile storage or parking space shall be provided with vehicular access to a street or alley. Parking shall comply with the minimum requirements noted.

PARKING SCHEDULE

	LAND USE ON LOT	PARKING REQUIREMENTS
(a)	Dwellings:	
	(1) Hotels/Motels: Without restaurants, lounges, and banquet facilities	One and a half (1.5) space for each bedroom
	(With in-house restaurants, convention/meeting capabilities):	One and one-half banquet facilities, or one and a half (1.5) spaces for each guest bedroom
(b)	Public Assembly:	
	(1) Theaters, Auditoriums, Coliseums, Stadiums, and Similar Places of Assembly:	One (1) space for each four (4) seats
(c)	Health Facilities:	
	(1) Hospitals, Sanitariums, Nursing Homes, Homes for the Aged and Similar uses:	One (1) space for each four (4) beds, plus one (1) space for each employee on the maximum shift.
	(2) Kennels and Animal Hospitals	A parking area equal to thirty (30) percent of the total enclosed or covered area.
	(3) Medical, Dental and Health Offices and Clinics:	One (1) space for each two hundred (200) square feet of floor area used for offices and similar purposes.
	(4) Mortuaries and Funeral Parlors	Ten (10) spaces per parlor, chapel unit or one
(d)	Business:	
	(1) Restaurants (including bars, grills, diners, cafes, taverns, night clubs, lunch counters, and all similar dining and/or drinking establishments	Ten (10) parking spaces for each one thousand (1,000) square feet of floor area.
	(2) Commercial and Shopping Centers:	One (1) space per two hundred fifty (250) square feet of floor area.
(e)	Uses Not Listed Above	Four and one-half (4.5) parking spaces per one thousand (1,000) square feet of floor area.
	CALCULATION OF FLOOR AREA: In the calculation of floor area to determine parking ratios, the term "floor area" shall mean enclosed areas which are heated and cooled.	Expressly excluded from this term are garden center floor areas and outdoor storage areas or outdoor sales areas.

(b) Design Standards:

(1) Definition:

An off-street parking space is an all-weather surfaced area not in a street or alley, permanently reserved for the temporary storage of one automobile and connected with a street or alley by an all-weather surfaced driveway which affords unobstructed ingress and egress to each space.

(2) Parking Area Dimensions:

The design and dimensions of the standard parking area shall have a minimum nominal dimension of eighteen (18) feet in depth and nine (9) feet in width.

The design and dimension of handicap parking areas shall be in accordance with the Americans with Disabilities Act.

(3) Width of Two-Way Access Driveways:

The minimum width of two-way access driveways within parking areas shall be twenty-four (24) feet.

(4) Paving Standards:

Parking spaces and driveways shall be paved to the standards established by the City.

(5) Drainage:

Off-street parking facilities shall be drained to prevent damage to abutting property and streets, and to prevent pollutants from draining onto such streets and the adjacent lots. Landscape and perimeter areas shall be so graded as to direct runoff to the storm drainage system. The storm drainage system shall be designed to include water quality measures for the first one (1) inch of rainfall.

(6) Off-Street Loading and Unloading Space:

Off-street loading/unloading spaces shall be provided as hereinafter required by these District Regulations.

(a) Size of Spaces:

Each off-street loading/unloading space shall have minimum dimensions of fourteen (14) feet in height, twelve (12) feet in width, and fifty-five (55) feet in length.

However, upon sufficient demonstration a particular loading space will be used exclusively by shorter trucks, the Planning Commission may, upon request, reduce the minimum length accordingly to as much as thirty-five (35) feet.

(b) Connection to Street or Alley:

Each required off-street loading and unloading space shall have direct access to a street or alley or have a driveway which offers satisfactory ingress and egress for trucks.

(c) Floor Area More Than Ten Thousand (10,000) Square Feet:

There shall be provided for each commercial building, or similar use requiring the receipt or distribution of materials or merchandise and having a floor area of more than ten thousand (10,000) square feet, at least one (1) off-street loading and unloading space. Such space shall be so located as not to hinder the free movement of pedestrians and vehicles over a sidewalk, street, or alley.

(d) Location:

All required off-street loading and unloading spaces shall be located on the same lot as the building which they are intended to serve or on an adjacent lot when shared with the user occupying said adjacent lot.

39-14 LANDSCAPE AND TREE PROTECTION

(a) Purpose:

The intent of this Section is to establish minimum standards for the provision, installation, and maintenance of landscape plantings and trees in order to achieve a healthy, beautiful, and safe community.

(b) Applicability and Use:

(1) Applicability:

The provisions of this Article apply to all projects within the District involving the construction of business and commercial structures, all existing structures which increases the gross floor area by thirty (30) percent or more and other projects as required by the Planning Commission.

(2) Use or Ownership Provision:

In the event of a change in: (a) use of property, (b) occupancy, or (c) ownership regardless of name change to any business, commercial, or industrial development, it shall be the responsibility of the owner to comply with the provisions of this Article within one hundred and eighty (180) days from the date in which the change occurs.

(c) Buffer Zone Requirements:

Where a business district in the District abuts, without any intervening public road right-of-way, any part of an adjoining residential area, a buffer zone twenty (20) feet wide shall be required.

The buffer shall run the entire length of the abutting lot line(s). Under no circumstances shall this buffer impair vehicular flow and shall be part of the yard requirements. Said protection buffer shall be maintained in such a manner to accomplish its purpose continuously. This District shall comply with the following minimum standards and said buffer zone shall be constructed of at least one of the following three (3) designs or a combination thereof, as determined by the Director of Community Development and approved by the Planning Commission:

(1) Wall or Fence:

If a wall or fence of solid appearance is provided as a protection buffer, it shall be at least six (6) feet in height and of a construction and a design recommended and approved by the Planning Commission.

(2) Screen Planting Strip:

A staggered double row of evergreen plantings at least ten (10) feet in width which will grow to at least ten (10) feet in height and spaced in a manner in which after three years it will provide an impervious visual barrier.

(3) Natural Forest:

A natural forest is in its undisturbed forest which provides a nearly impervious visual barrier due to the dense nature of the plants and/or trees. If this option is chosen, the width of the buffer zone shall be twenty-five (25) feet and shall be shown on the landscape plan. The Director of Community Development shall determine whether the barrier is satisfactory via site inspection prior to final approval.

(d) Landscape Standards:

(1) Site Plan Review:

A site plan shall not be approved by the Planning Commission without an acceptable landscape and irrigation plan. A Certificate of Occupancy shall not be issued for any development project unless a certification of compliance letter has been submitted from the design engineer and the design landscape architect. Said certification shall include the following: inspection date; signature and seal of said engineer and landscape architect; list of deficiencies and/or deviations from plans approved by the Planning Commission; and a statement regarding compliance with plans submitted.

(2) Subdivision Review:

A subdivision shall not be approved by the Planning Commission without an acceptable landscape and irrigation plan, as the same is defined pursuant to the provisions of this Section of the District Regulations.

All subdivisions shall require a landscape plan for the common areas of the subdivision: the entrance, detention pond, and other areas which are deemed appropriate by the Planning Commission.

(3) Jubilee Retail Overlay District Landscaping Retrofit:

Jubilee Retail Overlay District shall be developed as a Low Impact Development (LID) wherein the Planning Commission shall consider innovative low impact development landscape design, techniques and methods as a means to decrease stormwater runoff, pollution, erosion and to recharge groundwater. Bio-retention areas, porous asphalt, permeable pavers, pervious walkways, elevated landscape beds, bio-retention cells, vegetated swales, infiltration trenches, and dry wells to increase storage volume and facilitate infiltration are encouraged.

(4) Interstate 10 Landscaping:

To the extent the City has authority to do so; it authorizes the developer/owner to remove some trees in that portion of Interstate 10 which abuts the northern boundary of the District. Such removal is conditioned upon the following:

(a) Submission to and approval by the Planning Commission of a landscaping plan prepared by the developer/owner;

(b) Obtaining any necessary permits from the Alabama Department of Transportation for the installation of landscaping improvements within the area from which trees are removed; and,

(c) The developer/owner's installation of the landscaping improvements according to the approved landscaping plan.

(e) Revisions to Landscape Plan:

If proposed construction shall cause changes in the landscape or irrigation plan, a revised plan shall be submitted to the Director of Community Development for re-evaluation.

(f) Issuance of Site Disturbance Permit:

A landscape and irrigation plan shall be submitted for review by and the recommendation or other comments of the Director of Community Development and shall be subject to the approval of the Planning Commission prior to the issuance of a Site Disturbance Permit.

(g) Compliance with Landscape Provisions:

All subject properties, as well as those owned by the City, shall comply with the provisions of this Article.

(h) Certification and Plan Requirements:

Landscape plans shall be drawn and stamped by a licensed landscape architect registered in the State of Alabama.

The landscape plan shall be of professional quality and include the following:

(1) Date, scale, north arrow, title, and names and contact information for property owner(s), developer, and the landscape architect.

(2) Location of existing boundary line dimensions of the building site, existing water sources, significant drainage features, existing and proposed streets or alleys, existing or proposed utility easements on or adjacent to the building site, rights-of-way, setbacks, locations of proposed parking spaces, and location of existing and/or proposed sidewalks.

(3) The location(s) and dimension(s) of the proposed landscaped areas within the parking area(s) including a description of new trees and plant materials to be placed within landscaped area(s). Both common and botanical names shall be included.

(4) Locations, type, and design of the proposed irrigation system.

(5) Location and species of buffer zone vegetation.

(i) Certification by Alabama Licensed Landscape Architect:

Any and all landscape plans as required in this Section shall, in addition to any other requirements, be reviewed and approved by an Alabama licensed and registered landscape architect to be designated by the Planning Commission with the professional costs for such services to be reimbursed to the City by the party submitting the plans for approval. Such landscape architect's review shall include the design, irrigation, location and type of planting, and any and all other criteria necessary so as to ensure that the planting and design is consistent with local standards.

If the landscape architect's review fee is known at the time of the plan's submission, the submitting party shall pay the fee upon submission. Otherwise, the fee shall be paid by the submitting party within ten (10) days of receipt of a statement of the amount of the fee.

39-15 OFF-STREET PARKING FACILITIES

The design and appearance of parking areas are intended to be compatible with the character of the community. Toward this objective, the following landscaping standards shall be observed in the construction of off-street parking areas which accommodate six (6) or more parking spaces:

(a) At least fifteen percent (15%) of the total lot area intended for off-street parking shall be suitably landscaped.

(b) Interior portions of the parking area at intervals of twelve (12) parking spaces shall be broken by provision of landscaped islands. Such landscape islands shall

include the placement of shade or flowering trees at least two and one-half (2-½) inches or greater in caliper and ten (10) feet in height at planting.

(c) Each separate landscaped area must be a minimum of two hundred eighty (280) square feet if it is to be counted toward the minimum landscaped area requirements.

(d) Landscaped areas shall be protected from vehicular encroachment by the use of curbing or wheel stops.

(e) The owner, tenant and/or agent, if any, shall be jointly and severally responsible for watering and maintaining all landscaping in a healthy, neat and orderly condition, replacing it when necessary, and keeping it free of refuse and debris.

(f) A minimum of five (5) feet side and rear landscaping may be required in the landscape plan depending on the topography and arrangement of parking facilities.

(g) If required, such areas shall be planted with a combination of trees, shrubs, and grass or other ground cover adequate to break the expanse of contiguous parking areas and to present an attractive appearance as determined by the Director of Community Development.

(h) Innovative landscape designs using "natural cluster of trees" rather than the required one (1) tree at intervals of twelve (12) parking spaces may be used if approved by the Planning Commission.

39-16 SIGN PROVISIONS

a) Signs Prohibited in the Jubilee Retail Overlay District:

The following signs are prohibited:

(1) Prohibited Placement:

Any sign erected or painted upon a sloped roof, fence, tree, stand pipe, fire escape, or utility pole is prohibited, except that a manufacturer's or installer's identification (ID) plate shall be permitted, provided that such plate does not exceed 5 x 8 inches in size.

(2) Prohibited Wording:

Any sign which is not a traffic control sign and uses the word "Stop" or "Danger" prominently displayed and/or which is a copy or imitation of official traffic control signs is prohibited.

(3) Flashing Signs Prohibited:

(a) General Prohibition:

Except as otherwise provided in subsection (b) (1) below, flashing signs, signs which contain intermittent illuminations and digital LED signs/reader boards are prohibited.

(b) Exceptions:

This subsection does not prohibit the following:

1. Signs required for traffic control; and,

2. Signs which exhibit time, date, temperature, and other customary public information.

(4) Prohibited Sign Types:

Portable signs, bench signs, snipe signs, sandwich signs, except as allowed in *Article 33, Sign Provisions*, ladder-type signs, billboard signs or off-premises signs. "Billboard" is defined as "an off-premises or off-site sign advertising an establishment, merchandise, product, service, or entertainment which is not sold, provided, manufactured, or furnished on the property on which said sign is located." "Off-premises sign" is defined as "a billboard or other sign on which any portion thereof relates to a premises (or activities thereon) other than the property on which said sign is located."

(5) Prohibited Sign Effects:

Signs which produce sound, noise, cause interference with radio, telephone, television or other communication transmission, produce or reflect motion pictures; emit visible smoke, vapor, particles, odor, are animated, or produce any rotation, motion, or movement.

(6) Illuminated Tubing:

(a) General Prohibition:

Illuminated tubing or strings of lights that outline property lines, sales area, roof lines, doors, windows, wall edges, similar areas or other architectural features of a building are prohibited.

(b) Exception:

This prohibition shall not apply to temporary displays erected in connection with holiday decorations and community decorations.

b) Permitted Signs:

The following signs are permitted, subject to review by the Planning Commission to determine compliance with the sign criteria provided below in this and further subject to the requirement that permitted signs shall have internal illumination only.

The maximum allowable square footage established in each zoning designation and/or overlay district shall apply as provided in each district. Said allowable area shall not be exceeded. In the event that channel letters, as defined in *Article 8, Definitions*, are proposed, then the maximum allowable square footage shall be calculated at a rate of eighty percent (80%) in lieu of the standard rate of one hundred percent (100%).

(1) Monument and Pylon Signs:

Except as otherwise provided in these District Regulations, the following monument and pylon signs are permitted in the District.

(2) Jubilee Retail Overlay District Pylon Sign:

(a) The developer/owner or designee thereof is permitted to install and maintain one (1) on-premise pylon sign on their development at a location approved by the Planning Commission. This sign is permitted to have panels for multiple businesses in the District, provided that the panel space on each side of the Jubilee Retail Overlay District Interstate Pylon Sign shall not exceed nine hundred (900) square feet in the aggregate and no individual panel shall have more than two hundred and fifty (250) square feet or less than one hundred and fifty (150) square feet per side.

(b) The height of the Jubilee Retail Overlay District Interstate Pylon Sign shall not exceed ninety (90) feet and shall be determined based on a sight line study obtained by the developer/owner and approved by the Planning Commission as justification for the proposed height and to insure that the top panel on the sign is visible while traveling in any direction on Interstate 10.

The sight line study shall consider the following:

a. The topographical elevation of the location of the Jubilee Retail Overlay District Interstate Pylon Sign;

b. Any obstruction to the sign panels by trees, other signs, structures or items along Interstate 10.

(c) Any lot in the District which abuts Interstate 10 and either has at least two hundred (200) feet along the right-of-way of Interstate 10, or is located at the intersection of the Interstate 10 ramp/right-of-way and Highway 90, shall be permitted one (1) individual lot interstate pylon sign at or near said lot's common boundary with Interstate 10.

(d) Permitted individual lot interstate signs shall not exceed fifteen (15) feet in width, or forty-five (45) feet in height, and shall have a maximum area of three hundred (300) square feet per face. Lots in the Jubilee Retail Overlay District which border Interstate 10, other than those described immediately above may not have an individual lot interstate pylon sign unless approved as a variance by the Board of Zoning Adjustment.

(3) Shopping Center or Development Signs:

One (1) sign is permitted on U.S. Highway 90 identifying the development. Each side may also have panels beneath the development identification not exceeding one hundred and fifty (150) square feet each for multiple businesses within the District. No sign shall exceed twenty-one (21) feet in height or fifteen (15) feet in width.

(4) Monument Signs:

Each lot having frontage on U.S. Highway 90, or any other public road or right-of-way within or abutting the District shall be permitted to have one (1) monument sign for each public road right of way which the lot abuts. The sign shall be placed perpendicular to the said highways and/or right of way. If the lot's road frontage is three hundred (300) feet or less, then the permitted sign area shall not exceed fifty (50) square feet per face. If the lot's road frontage exceeds three hundred (300) feet then the permitted sign area shall not exceed one hundred (100) square foot per face. All monument signs shall have a pedestal. The sign shall not exceed fifteen (15) feet in height, pedestal included.

(5) Directional Signs:

Directional Signs shall be permitted at the intersection of all roads in the Jubilee Retail Overlay District. Directional Signs shall not exceed sixteen (16) square feet per face.

(6) Wall-Mounted Signs:

Each establishment/business premises under sixty-five thousand (65,000) square feet of building area in B-1, Local Business and B-2, General

Business districts may acquire an additional permit for a wall-mounted sign of a size not to exceed the lesser of three hundred fifty (350) square feet or thirty percent (30%) of the surface frontal area of the building. Each establishment sixty-five thousand (65,000) square feet of building area or larger may acquire a permit for wall mounted signage of a size not to exceed six and one half percent (6.5%) of the surface frontal area of the building. Signs mounted on mansards, marquees, and awnings are deemed to be wall signs.

(a) Side Surface Area Wall-Mounted Signage:

A business establishment sixty five thousand (65,000) square feet of building area or more may have two (2) additional wall-mounted signs of a size not to exceed five percent (5%) of the surface area of the side of the building. Said signage shall be limited to one side of the building, either the left or right side or the rear of the building.

(b) Accessory Use Advertisement Wall-Mounted Sign:

A business establishment between forty thousand (40,000) square feet of building area to one hundred thousand (100,000) square feet of building area may have one (1) additional wall-mounted sign of a size not to exceed one hundred (100) square feet for the purpose of advertising an accessory use.

A business with over one hundred thousand (100,000) square feet of building area may have two (2) additional wall-mounted signs of a size not to exceed one hundred (100) square feet each for the purpose of advertising accessory uses. No business establishment may have more than three (3) wall-mounted signs.

(7) Menu Type Signs:

One menu type sign per drive-thru window service shall not exceed forty (40) square feet in area or eight (8) feet in height.

(8) Gasoline and Fuel Signs:

Gasoline or other motor vehicle fuel pricing signs, in addition to permitted name or identification signs, are permitted in any business or industrial district. Such signs shall not exceed twelve (12) square feet in area and must comply with the other applicable sign requirements for the Jubilee Retail Overlay District.

(9) New Construction Signs:

(a) General Provision:

Temporary non-illuminated signs not more than thirty-two (32) square feet in area, erected in connection with new construction work and displayed on the premises during such time as the actual construction work is in progress may be permitted. One (1) such sign, no greater than ten (10) feet in height, is allowed for each street frontage. Such signs shall be removed upon completion of the project.

(b) Temporary Advertising Sign:

A temporary advertising sign will be permitted to the owner for the development for each individual business premises, shopping center premises provided the area of each sign shall not exceed thirty-two (32) square feet, is non-illuminated, and is within the confines of the development. These signs shall be the height no greater than ten (10) feet mounted from the ground, for no more than one (1) sign, either single or double faced, per street frontage.

(c) Temporary Promotional Banners:

Two (2) temporary signs or banners not exceeding fifty (50) square feet each in area and temporary decorative flags, bunting, pennants and streamers for recognizing grand openings are permitted. Said temporary banners shall be kept in good condition and shall be permitted no more than fourteen (14) days. Furthermore, decorative seasonal banners are permitted on light standards at all times, provided that the same are maintained in good condition.

39-17 DISTRICT MAP

Jubilee Retail Overlay District Map, Exhibit F is hereby adopted as a part of this Ordinance (See Appendix).

ARTICLE XXXX
SELF SERVICE VENDING UNITS

40-1 PURPOSE & APPLICABILITY

The purpose of this Article is to promote the health, safety, convenience, order, prosperity, and general welfare of residents and to facilitate the goals, objectives and recommendations of the Comprehensive Plan through the development of regulations that help maintain the character of the City of Daphne and to encourage proper development in the community by governing the size, location, physical dimensions, setbacks and other standards of self-service vending machines larger than five feet in width, three feet in depth, and seven feet in height (5'w x 3'd x 7'h), and other similar uses in each district established in this Ordinance; to prevent disruptions, obstructions and hazards to vehicular and pedestrian traffic that may result from these uses; to minimize the possible adverse effect on nearby public and private property; and to encourage a positive visual environment in harmony with the natural aesthetics of the City of Daphne.

No self service vending unit or other similar use shall be located in the City of Daphne except in accordance with the provisions provided herein. ***This Article intends to regulate outdoor self service vending units, kiosks, or similar uses which exceed fifteen square feet in area and seven feet in height. This Article does not propose to regulate indoor vending machines.***

40-2 WORDS & TERMS DEFINED

(a) Portable Vending Machine:

Any unattended self-service device that, upon insertion of money, credit cards, check cards, token, or similar means, dispense something of value including food, beverages, goods, and merchandise. Such vending machine requires an electrical permit only. Such vending machine does not require a city business license or site plan approval, and are not larger than five feet (5') in width x three feet (3') in depth x seven feet (7') in height.

(b) Ice Vending Machine:

A modular unit or structure that produces, stores, bags and or vends ice to the consumer in an automated fashion located inside of a business or similar use. Such vending machine may not require a city business license or site plan approval, if considered part of an established business.

(c) Self Service Vending Unit:

Self service vending unit is a stand-alone vending machine larger than five feet (5') in width x three feet (3') in depth x seven feet (7') in height that may operate without full time service personnel. These units are activated by the insertion of money; the product

is automatically or dispensed in bulk outside to the consumer. In addition to site plan review by the Planning Commission, several permits and approvals including but not limited to electrical, plumbing, sewer connection, city business license, and Health Department certification may be required. It should be noted that all independently owned and operated establishments and vending franchises under contract to lease space must acquire a separate business license.

(d) Similar Uses:

Any unattended self-service distribution unit that, upon insertion of money, credit cards, check cards, token, or similar means, dispense something of value, an automated convenience stores and/or any other automated vending use except those defined herein as portable vending machine and/or vending machine.

40-3 PROHIBITED DISTRICTS

Self service vending units and other similar uses shall be prohibited in the Olde Towne Daphne District and the Village Overlay District.

40-4 PERMITTED DISTRICTS

Self service vending units or other similar use may be permitted in a B-2, General Business, district by Planning Commission approval upon site plan review and in a C/I, Commercial Industrial, district by right upon administrative review of site plan by the Director of Community Development or designee thereof. Such uses shall be prohibited in all other zoning districts. Permitted uses must comply with the requirements of the district in which it is located, unless a variance from such requirements is specifically requested and granted by the Board of Zoning Adjustment.

40-5 SITE PLAN APPLICATION

Prior to making any improvements, the developer/owner shall submit to the Planning Commission a site plan of the project for review in accordance with procedures established in *Article 15, Site Plan Review*. These items shall be received in the Department of Community Development not less than thirty (30) days prior to a regularly scheduled meeting of the Planning Commission at which meeting the site plan is to be formally submitted for review.

40-6 STANDARDS

Where permitted, self service vending units shall comply with the following minimum standards:

(a) Self service vending units may be a primary use of property or as an accessory to an existing business or commercial entity. Said uses would need to be considered compatible with a convenience store, car wash, grocery store, camp ground, marina, shopping center, shopping mall, RV park and large recreational event locations.

(b) A self service vending unit may be permitted as a principal or accessory use along a collector road or a major thoroughfare in areas with high pedestrian activity. Said units shall not be located on a residential street.

(c) Where such self service vending unit such as a self service ice, movie, or similar unit is proposed as a principal use of property, no additional outside portable vending machines shall be permitted, unless deemed appropriate by the Planning Commission.

(d) A self service vending unit shall be no closer than one hundred (100) feet to any single family residential district.

(e) No self service vending unit shall encroach into the minimum required setback or adjacent parking for a previously permitted use. Except where directly abutting an existing business or commercial establishment, additional setbacks may be required if deemed appropriate by the Planning Commission.

(f) Architectural features of any self service vending unit shall be complementary to existing development in the immediate area. Building elevations shall be submitted with each application considered for approval, and will be appropriate as deemed by the Planning Commission.

(g) The foundation of each unit shall be screened by skirting, foundation plantings, landscaping, and anchored per Building Code requirement(s) to the subgrade to resist hurricane force winds.

(h) Roof-mounted or other equipment on top of the unit shall be screened by a parapet wall.

(i) Within thirty (30) calendar days of the closure or ceasing of operations of any self service vending unit, all equipment and incidentals shall be removed from the premises.

(j) Applicants shall acquire approval from the Planning Commission or where applicable the Director of Community Development, and the Baldwin County

Health Department prior to the issuance of a City of Daphne business license or permits by the Building Official.

(k) No vending machine shall be placed on or next to any public or building sidewalk that would inhibit the path of any handicap person or violate any ADA requirement.

40-7 SIGNS

All signage shall be provided in accordance with *Article 33, Sign Provisions*. Signs incorporated on machinery or equipment shall be in accordance with the provisions enumerated in *Article 33, Sign Provisions, Signs Incorporated on Equipment or Machines*.

40-8 LANDSCAPING

Where a self-service vending unit is proposed as a primary use of property, requirements of Article 19, Landscape Provisions, of the Land Use & Development Ordinance shall apply.

40-9 PARKING

(a) Where a self-service vending unit is proposed as an accessory to an existing business location that has an approved site plan on record in the Department of Community Development and that has adequate off-street parking, no additional parking shall be required. In no case shall the addition of said unit create nonconformity in the parking requirements of the original business.

(b) Where a self-service vending unit is proposed as a primary use of property, four (4) off-street parking spaces shall be provided per unit. All parking spaces shall be designed in accordance with the

40-10 ACCESS

(a) Ingress and egress shall be located where such will not impede pedestrian or vehicular traffic flow.

(b) Where used as an accessory to an existing business, the existing access or driveway shall be utilized, unless deemed inappropriate by the Planning Commission.

40-11 WASTE DISPOSAL

No accessory structure shall be allowed except an enclosed trash container which shall be located to the rear of the machine or in a location deemed appropriate by the Planning Commission.

40-12 MAXIMUM BUILDING AREA

The allowable unit size shall be determined on a case-by-case basis by the Planning Commission. It shall depend upon size of the site, lease space, site location, and the potential impact of the proposed use on the surrounding properties. In no case shall a self-service vending unit be more than two hundred (200) square feet in area.

40-13 LEGAL NONCONFORMING SELF-SERVICE VENDING UNIT STATUS

Any self-service vending unit located within the corporate limits prior to the enactment of this Article, or located on property prior to its annexation, which does not conform to the provisions as set forth by this article, is eligible for characterization as a “legal nonconforming” self-service vending unit or other similar use and is permitted.

40-14 STRUCTURAL ALTERATION, ABANDONMENT, DISCONTINUATION, RELOCATION OR REPLACEMENT

If a legal nonconforming self-service vending unit is after the adoption of this article, structurally altered, abandoned, discontinued, relocated or replaced, including the result of a natural disaster or weather related event, such unit shall be removed where prohibited, and otherwise replaced with a conforming unit.

40-15 LOSS OF LEGAL NONCONFORMING STATUS

Legally nonconforming self-service vending unit shall be either removed, replaced with a conforming machine by three (3) years from the date in which the property is annexed into the corporate limits. It is intended that this provision shall ensure that those who hold legally nonconforming status will recoup initial investment costs and remaining useful life of such machine. It is further intended that this provision shall not deprive any owners of property rights without just compensation so as to avoid the occurrence of a taking.

It is envisioned that the time period allotted herein shall allow for amortization and depreciation of such units based upon the following factors: initial investment costs, remaining useful life, length of time of ownership of the premises, the building, maintenance expenditures, cost of removal and replacement.

ARTICLE XXXXI Intentionally Left Blank

ARTICLE XXXXII Intentionally Left Blank

ARTICLE XXXXIII Intentionally Left Blank

ARTICLE XXXXIV Intentionally Left Blank

ARTICLE XXXXV
ADOPTION

45-1 GRANDFATHER CLAUSE

Any use of buildings or land existing prior to the enactment of the Land Use and Development Ordinance, September 21, 1987, and does not conform to the provisions set forth by the Ordinance shall be allowed to continue as a nonconforming use. Any land development projects within the territorial and legal authority of this Ordinance that have been initiated since January 1, 1985 and is not located in a district designated for the intended use, may be permitted to continue provided that:

(a) Written, dated, and verifiable documents other than deeds for the purchase of land, e.g., plans, permits, applications to appropriate permitting agencies, etc., can be produced in support of the proposed project.

(b) The City of Daphne reserves the right to require compliance with the requirements of this Ordinance for districts in which similar uses are permitted.

(c) Other conditions may be required by the City due to the unique circumstances of the land.

45-2 CONFLICT WITH OTHER LAWS

Whenever the requirements of this Ordinance conflict with the requirements of any other lawfully adopted statutes, rules, regulations, or ordinances the more restrictive, or that which imposes the higher standard shall govern.

45-3 VALIDITY

Each phrase, sentence, paragraph, section, or other provision of this Ordinance is severable from all other such phrases, sentences, paragraphs, sections, and provisions.

Should any phrase, sentence, paragraph, section, or provision of this Ordinance be declared by the courts to be unconstitutional or invalid, such declaration shall not affect any other section or provision of this Ordinance.

45-4 REPEAL OF REGULATIONS AND ORDINANCES

This is a comprehensive enactment of a Zoning Ordinance and Subdivision Regulations for the City of Daphne and all prior Zoning Ordinances and

Subdivision Regulations are hereby superseded and repealed.

45-5 DISCLAIMER OF LIABILITY

These regulations shall not create liability on the part of the City of Daphne, the Planning Commission, any officer, or employee thereof for any damages that may result from reliance on this Ordinance or any administrative decision lawfully made there under.

45-6 EFFECTIVE DATE

This Ordinance shall take effect and be in force upon and hereinafter the date of its adoption by the City Council.

45-7 PENALTIES AND REMEDIES

(a) Penalties:
Any person violating any provision of this Ordinance shall be fined upon conviction, not less than twenty-five dollars ($25.00) nor more than five hundred dollars ($500.00) and costs of court for each offense. Each day such violation continues it shall constitute a separate offense.

(b) Remedies:
In case any building or structure which exists or is proposed to be erected, constructed, reconstructed, altered, renovated, or maintained; or any building, structure, or land which is proposed to be used in violation of this Ordinance; or any adjacent or neighboring property owner would be specially damaged by such violation the Building Official, Code Enforcement Officer, or other appropriate authorized representative may, in addition to other remedies, institute injunction, mandamus, other appropriate action, proceeding to prevent such unlawful erection, construction, reconstruction, alteration, renovation, maintenance, use, correction or abatement of such violation, or to prevent the occupancy of said building, structure, or land. Each and every day such unlawful erection, construction, reconstruction, alteration, conversion, maintenance or use continues, it shall be deemed a separate offense and shall be subject to the fines and penalties

This Ordinance was adopted by the City of Daphne, Alabama, on the
____ day of 20 __.

Fred Small, Mayor

Cathy S. Barnette,
Council President

David L. Cohen, MMC
City Clerk,

PUBLIC HEARING LIST #2

FOR COUNCIL MEETING

JULY 5, 2011

TO CONSIDER:

Memorandum of Understanding agreement with New Horizon Retail Development LLC for development of Academy Village commercial development on Highway 90 with the following stipulations: 1) issue limited liability tax warrants in an amount not to exceed $1,900,000 with debt payments to be paid from 1% of the Sales Tax collections generated by Academy and other businesses within the development; 2) set the interest rate not to exceed 7.5%; 3) establish a pay-back period not to exceed 15 years with no pre-payment penalty

ORDINANCE 2011-48

Appropriation of Funds: Lott Park and Trione Sports Complex Improvements

WHEREAS, the Fiscal Year 2011 Budget is being considered by the City Council; and

WHEREAS, prior to the adoption of the Fiscal Year 2011 budget, the City Council has determined that certain appropriations are required and should be approved and made a part of the Fiscal Year 2011 budget; and

WHEREAS, the City Council deems it necessary for improvements in Lott Park and Trione Sports Complex; and

WHEREAS, a cost for the materials in Lott Park is $4,752 and in Trione Sports Complex is $3,028; and

WHEREAS, the Public Works will supply the labor to do the improvements in the parks.

NOW, THEREFORE, BE IT ORDAINED BY THE CITY COUNCIL OF THE CITY OF DAPHNE, ALABAMA, that the Fiscal Year 2011 Budget is hereby amended to include a General Fund appropriation in the amount of $4,752 for Lott Park for the improvement of the bocce courts and $3,028 for Trione Sports Complex for the improvements of the dog park.

APPROVED AND ADOPTED by the City Council of the City of Daphne, Alabama, this _____ day of _____ , 2011.

_____
Cathy S. Barnette, Council President

_____
Fred Small, Mayor

ATTEST:

_____
David L. Cohen, City Clerk MMC

ENGINEERS
SURVEYORS
LAND PLANNERS

JOB CITY PARK 12X12 PAVILION
SHEET NO. ____ OF ____
CALCULATED BY RDJ DATE 5/8/2011
CHECKED BY ____ DATE ____
SCALE NTS

MATERIAL COST 12'X12' PAVILION
(14'X14' @ EAVE DRIPLINE)

COMPONENT	DESCRIPTION	QTY	COST	TOTAL
RAFTERS	2X8X8' PT	18	$5.26	$94.68
RIDGE/GABLE STRUTS	2X8X14' PT	4	$9.28	$37.12
PURLINS	2X4X14' PT	14	$5.10	$71.40
POST	8X8 X12' PT	4	$67.00	$268.00
TOP PLATE (S)	2X12X12' PT	6	$13.28	$79.68
TOP PLATE (L)	2X12X14' PT	2	$14.56	$29.12
* METAL ROOF DECK	26ga PBR R-LOC GREEN	220SF	$3.00/SF	$660.00
CONC. @ FOOTERS	80# QUICKCRETE	6	$4.00/EA	$24.00
HARDWARE	(ASSORTED)	1	$250.00	$250.00

TOTAL : $1514.00

* ROOF PURCHASE AND INSTALLATION BY SUB-CONTRACTOR

ALABAMA LICENSED 5/8/2011 No. 30405 PROFESSIONAL ENGINEER RICHARD D. JOHNSON

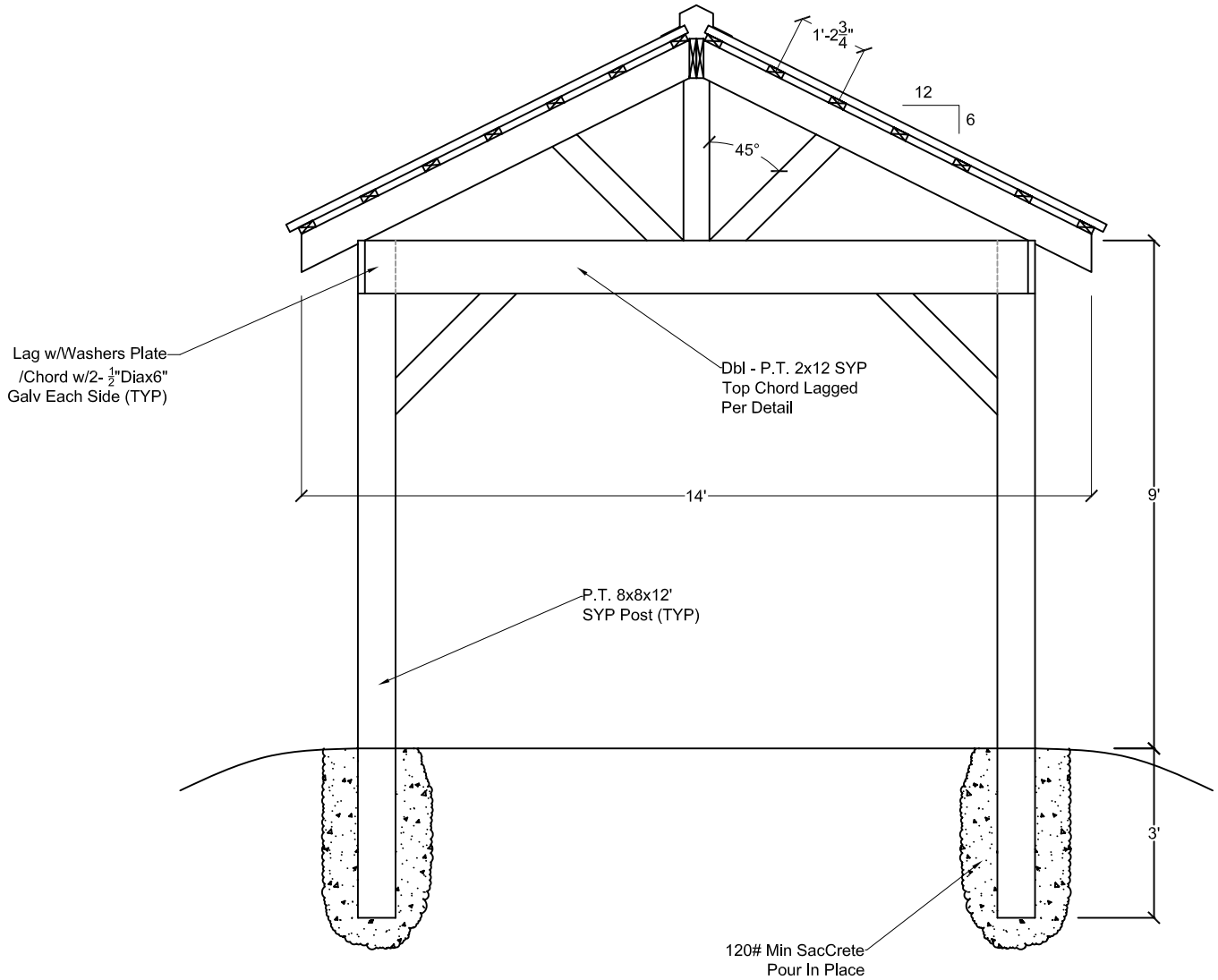

GABLE END ELEVATION VIEW

City Park - Picnic pavilion		
City of Daphne - Public Works Department		
Dwg: RDJ	Date:05/06/2011	Sheet # : 1 of 3

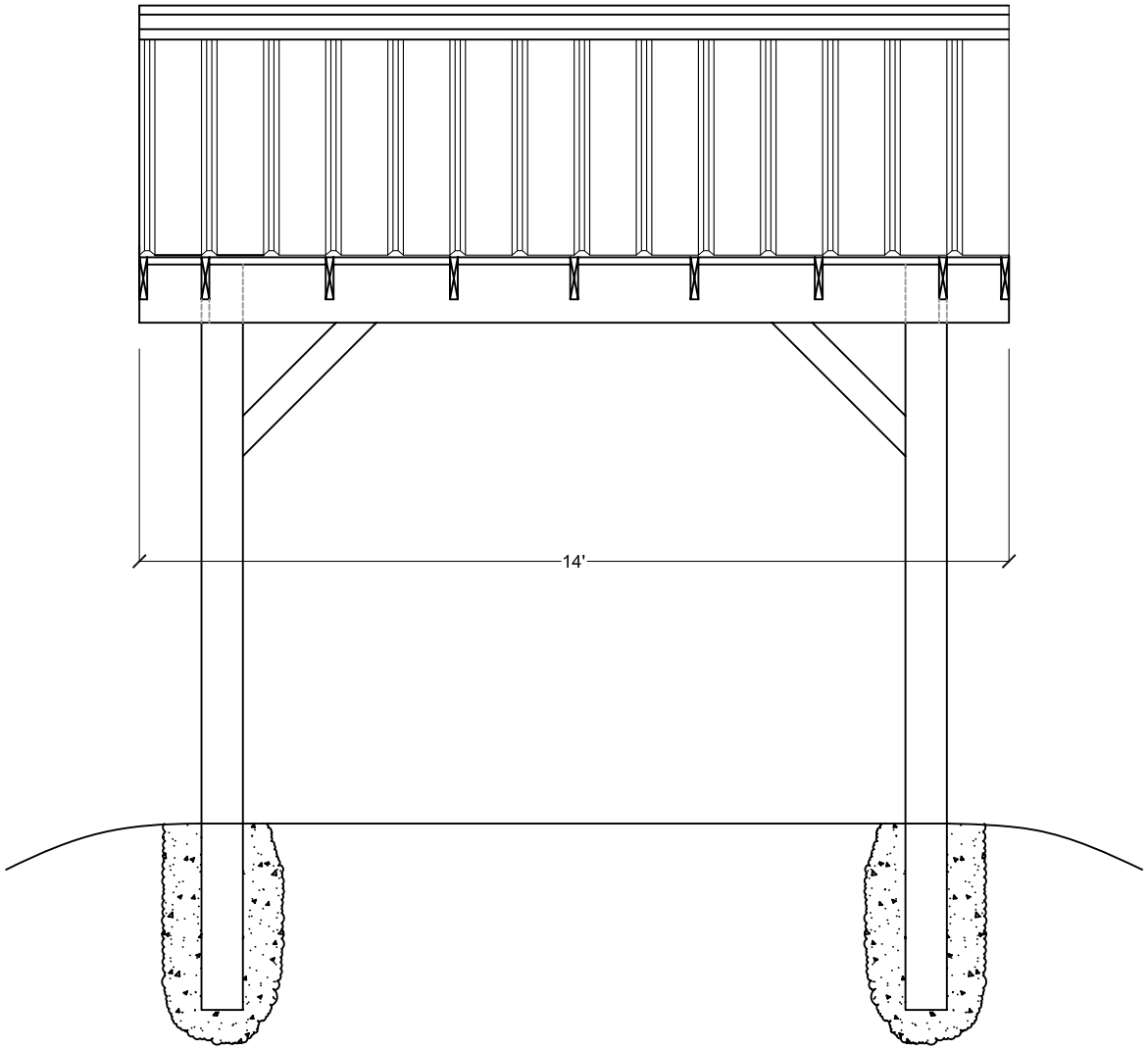

SIDE ELEVATION VIEW

City Park - Picnic pavilion		
City of Daphne - Public Works Department		
Dwg: RDJ	Date:05/06/2011	Sheet # : 2 of 3

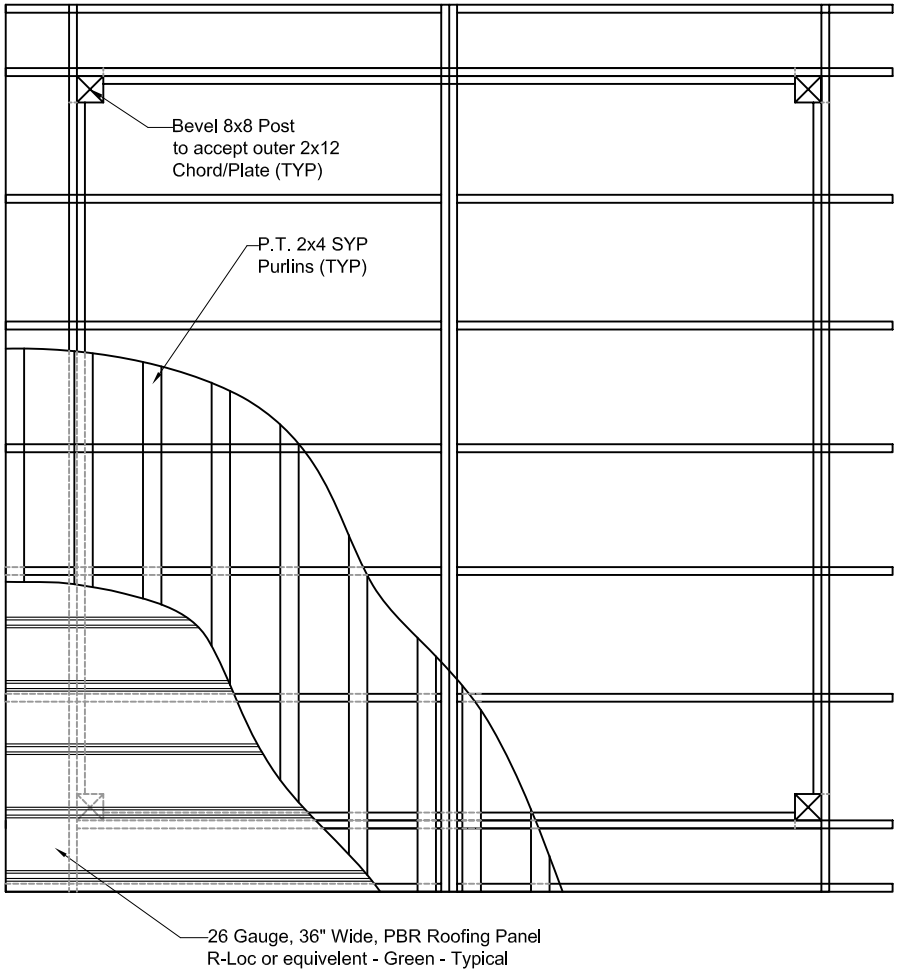

FRONT ELEVATION VIEW

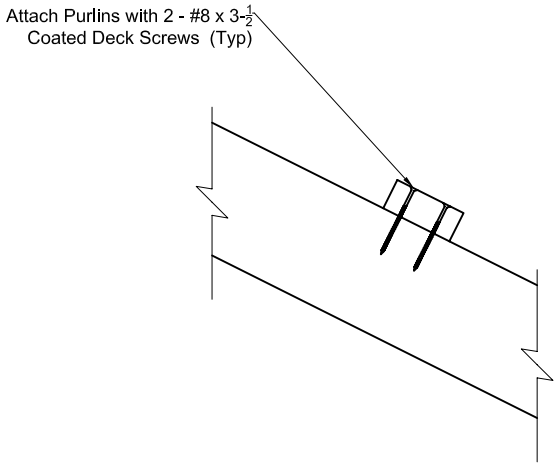

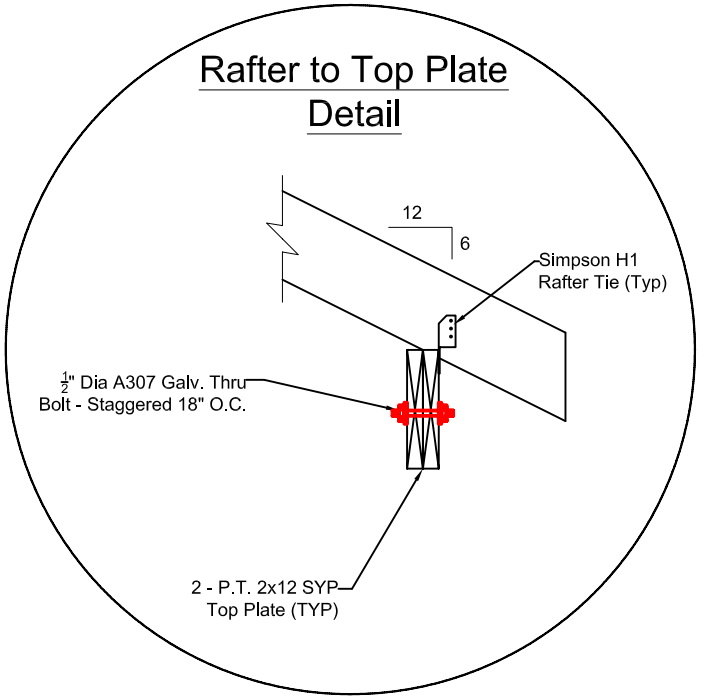

NOTE: Signage to be provided by contractor

City Park - Picnic pavilion		
City of Daphne - Public Works Department		
Dwg: RDJ	Date:05/06/2011	Sheet # : 3 of 3

CITY COUNCIL MEETING
STANDING COMMITTEE RECOMMENDATIONS:

FINANCE COMMITTEE REPORT

BUILDINGS & PROPERTY COMMITTEE REPORT

PLANNING/ZONING/CODE ENFORCEMENT COMMITTEE REPORT

PUBLIC SAFETY/ORDINANCE COMMITTEE REPORT

PUBLIC WORKS/BEAUTIFICATION/MUSEUM COMMITTEE REPORT

CITY OF DAPHNE
PUBLIC WORKS COMMITTEE MEETING
Time: 5:00 PM on June 20, 2011
Location: City Hall Council Chambers

CHAIRMAN - Councilman Bailey Yelding, District 1
Councilwoman Cathy Barnette, District 2
Councilman John Lake, District 3

I. CALL TO ORDER

The June meeting of the Public Works Committee was called to order at 5:00 PM

Present: Councilman Bailey Yelding, Councilman John Lake, Richard D. Johnson-Director Public Works, Sandra Cushway-Public Works Assistant, Jaye Robertson-HMR, Ashley Campbell-Building Inspections, EPM, Laina Guarisco-Citizen, Al Guarisco-Citizen, Frances Harrell-Citizen, Elaine Mead-Citizen, Doris Guarisco-Citizen, Mary Hirschfeldt-Citizen

II. PUBLIC PARTICIPATION & CORRESPONDENCE

A. **Work Request Report** – May 2011 reports reviewed

B. **Vehicle/Equipment Maintenance Report** – May 2011 report reviewed. Richard reported that $5,000 in non-routine maintenance was due to front end work, etc.

C. **Correspondence** – Card from ESCC, Darrelyn Bender regarding Public Works article in Gulf Coast Newspapers.

D. **Correspondence** – Email from Mike Spafford regarding Mechanical Maintenance assistance with surplus items.

E. **Public Participation** – Sidewalks on Randall Avenue. Residents will need to give up right of easement in order for sidewalks to be built on Randall Avenue. There are an estimated 26 properties that will be affected. Some of the sidewalk would be on private property. Property owners would need to sign giving up 15 feet of ROW. The initial plan for the sidewalk would start on the North side, cross over to the South side (where the ditch is on the South side) and then cross back over to the North side. Though the right of easement required would be 15 feet, all of that would not be used except during construction. The sidewalk would need to be routed around trees and utility poles. It was agree upon that Richard Johnson, Melvin McCarley and several residents would walk the route as a group. Mayor Small commented that, due to safety, the sidewalk would need to be as far away from the road as possible. There will be no costs to property owners and any disturbed property will be restore to original or better condition.

III. OLD BUSINESS

A. **Minutes – May 25, 2011 Councilwoman Lake made a motion to accept the minutes from the May 25, 2011 Public Works Committee meeting. Motion was seconded by Councilman Yelding**.

B. **Mosquito Reports** – No Activity. Mosquito spraying has started. Delays were due to temperature and waiting on new motor for vector sprayer.

C. **Street Sweeper Reports** – May 2011 reports reviewed. Sandi is working with developers of tracking software to make changes to program to allow better viewing of areas treated.

D. **Santa Rosa/Old County Road – Drainage.** Estimates and drawings included in packet. Ditch has been cleaned out. We have not had enough rain this year to see a problem. This will be a quarter of a million dollar project. We have other drainage problems of higher priority at this time. Councilman Yelding asked what could be done. Mayor Small suggested that this project be kept on the back burner for the time being. Councilman Yelding stated that once we have a rain event, then Richard Johnson can see the problem more clearly and make a recommendation at that time. Councilman Yelding commented

that this is an ongoing problem and we need to keep it in our minds. The property owner continues to places leaves in the ditch, further complicating the problem. Richard Johnson made a note of this fact.

IV. NEW BUSINESS

A. **Approval to Seek Bids for Replacement of Fuel System at Mechanical Maintenance Facility –** Is listed on capital list. Our current system goes down frequently causing employees to have to come in on weekends to bring the system back up. Councilman Lake asked if the cost of the system could be prorated since all City departments use it. Richard responded that it is a capital purchase which comes out of capital funds. Councilman Yelding said that the council just needs to be made aware that this new system isn't just for PW usage; it is for all departmental use city-wide. But it has to come out of one budget. Councilman Yelding asked Richard when he would like to present his recommendation to the council. Richard responded at this time he would like permission to seek bids for a replacement system. **Motion made by Councilman Lake for Public Works to proceed with acquiring bids for a replacement fuel system. Motion seconded by Councilman Yelding.**

B. **Building Maintenance – Request to Purchase Clarke Vantage 17" Auto Scrubber –** Richard introduced a recommendation to purchase a Clarke Vantage 17" Auto Scrubber for use at City Hall. It can be used for a variety of floor surfaces. Mopping the floors at City Hall is not effective or efficient and we cannot keep borrowing one from the Civic Center. **Motion was made by Councilman Lake to send to Finance Committee to request appropriation for fund of Auto Scrubber. Motion seconded by Councilman Yelding.** Councilman Lake agreed that this piece of equipment would save time and labor as well as wear on the floors at City Hall.

C. **May Day Park Boat Ramp – Request for motion for Legal Action against Thompson Engineering due to Errors and Omissions –** Richard Johnson reported that we have structures that are robbing sand from neighboring properties. We needed a boat ramp that was transparent. The local engineer that was hired was bought out by a larger engineering firm who ended up building the ramp nowhere near specifications. There have been several attempts by the City to remedy the problem. A lot of money and manpower has been spent on this project. Richard would like to recommend sending a letter to the engineering firm requesting that they rectify the problem. He would like for this letter to come from the City's legal counsel. **Motion was made by Councilman Lake to proceed with Richard's recommendation to have legal counsel contact engineering firm to rectify problem. Motion seconded by Councilman Yelding.** Councilman Yelding commented that a half a million dollars was spent on this ramp and it is still unusable by residents. Ashley Campbell gave report to original engineer firm. The preliminary design was attached to all permits issued. It was not structurally built as designed.

V. DIRECTOR'S REPORT

A. 25' gravel street. Richard would like to declare as a city street. There are 2-3 houses on the street. Drainage problems need to be addressed.

VI. SOLID WASTE AUTHORITY

A. **Monthly Equipment Use Report**

B. **Monthly Recycle Tonnage Report** (Last Quarter Tonnage Comparison). Not a great month in tonnage. We do not have a full year of historical data to compare. Councilman Lake said that we need to educate residents on the benefits of recycling. Richard stated that we hope to have the two new recycling trucks at the next council meeting for viewing. Tracey is working on outreach programs with the local schools. Working with the

children who relay what they learn to their parents.

VII. MUSEUM COMMITTEE

A. Minutes – May 13, 2011. Minutes reviewed.

VIII. BEAUTIFICATION COMMITTEE

A. Minutes – None submitted

B. Beautification Project List – reviewed

C.

IX. ENGINEER REPORT

A. **HMR Update** – Nothing to report.

V. FUTURE BUSINESS

A. Next Meeting – July 18, 2011

XI. ADJOURNMENT

The meeting adjourned at 6:20 PM.

City of Daphne – Public Works Committee

Meeting Date: June 20, 2011

Notice of Action Taken

Agenda Item #	Description	Action Taken	Forwarded To	Person to Implement	Notes
II.C.	Citizen's request for sidewalks along Randall Ave.	PW Staff to meet with Harrell & Mead and walk ROW for layout and easement acquisition	PW Admin Staff	PW Admin. Asst. PW Director PW Street Supervisor	Citizens will work to secure the needed sidewalk easements from the frontage property owners. PW Staff will coordinate sidewalk alignment and layout – once easements are secured PW Staff will bring back to PWC for appropriation
III.D.	Santa Rosa/Old County Road Drainage	General Discussion – No Action Taken – Will continue to study problem	PW Director & City Engineers	PW Director	PWC has taken problem under advisement and PW Director & City Engineers will continue to monitor
IV.A.	Approval to seek bids for a fuel delivery replacement system	Motion Passed	Finance Department	Finance Staff PW Mechanical Supervisor PW Superintendent	PW mechanical will provide "bid ready" specifications to Finance Dept. to be sent for bids. Once bids are received they will be forwarded to Finance Comm. for appropriation from capital funds
IV.B.	Request to Purchase Clarke Advantage 17" Auto Scrubber	Motion Passed – recommendation to Finance Committee	Finance Department	Finance Staff PW Admin. Asst.	To be placed on July 11, 2011 Finance Committee for possible appropriation from capital funds
IV.C.	May Day Park Boat Ramp – Request for legal action against Thompson Eng. – Errors & Omissions	Motion Passed – recommendation to Full Council	City Clerk City Attorney	City Clerk	PWC selected option #2 (Director's Memo) in the form of a motion (Attached)
IV.D.	Unnamed Roadway/Drainage Easement Acquisition – Accept for maintenance	Motion Passed – recommendation to Full Council	City Clerk Community Development	City Clerk Community Development	Motion with exhibit attached. Roadway will require naming – Community Development. Maintenance subject to ROW deed.

Richard D. Johnson, PE; Director

June 22, 2011

Fred Small
Mayor

David Cohen
City Clerk

Kimberly Briley
Finance Director/Treasurer

Richard D. Johnson, P.E.
Director of Public Works

CITY OF DAPHNE, ALABAMA
PUBLIC WORKS
MAINTAINING A QUALITY OF LIFE

Bailey Yelding, Jr.
District 1

Cathy Barnette
District 2

John L. Lake
District 3

Kelly D. Reese
District 4

Ronald Scott
District 5

Derek Boulware
District 6

August Palumbo
District 7

Memorandum

To: Councilman Bailey Yelding, Chairman; Public Works Committee

Thru: Honorable Mayor Fred Small

From: Richard D. Johnson, P.E.; Public Works Director

CC: File

Date: May 23, 2011

Re: Approval to seek bids for replacement fuel system – Mechanical Maintenance Facility

---

Mr. Mayor and Chairman:

I am seeking your approval to place a request before the Public Works Committee at their rescheduled meeting on Wednesday, May 25, 2011 to solicit for bids for a replacement Fuel Processing and Delivery System at our Mechanical Maintenance Facility.

This is only a request for bids. Once the bids are received and qualified, I will then request of the Mayor that they be forwarded to the Finance Committee for acceptance and possible appropriation. The replacement of this system is a current unfunded capital equipment need of the City.

The current system is antiquated and cost of maintenance is prohibitively high. This system serves all City Departments with fleet and equipment fuel requirements. It is not solely a Public Works need, but rather a City-wide need.

I have attached the specifications for your review and consideration.

Yours,

RDJ

Cc: Fuel System Specifications

Since 1933

McKinney Petroleum Equipment, Inc.

P. O. Box 9099 / 3926 Halls Mill Road / Phone: 251-661-8800 / E-Mail: clay@mckinneypetroleum.com
Mobile, AL 36691 / Mobile, AL 36693 / Fax: 251-661-8821 / Web Site: www.mckinneypetroleum.com

Fuel Dispenser Specification for Fleet Twin, One-Product, Suction Pump Dispenser

Fuel dispenser specification for a twin, one-product, suction pump dispenser, which is rated up to 22 GPM/83 LPM at the discharge (one hose operating). Designed for dispensing gasoline, including standard oxygenated blends; diesel, including biodiesel blends up to 20% (B20); and kerosene.

Features:

- Two (2) volume only, non-computer mechanical registers with power resets/interlocks. Electronic registers are not acceptable.
- Registers shall display on each side of cabinet.
- Each register shall have a non-resettable accumulative totalizer.
- All register openings shall be covered with tempered or double-strength glass (no plastic).
- The registers shall include 10:1 pulsers and a DC junction box shall be provided in the hydraulic cabinet for wire terminations.
- Cabinet: All exterior panels made from galvannealed steel for corrosion resistance. Side panels 14-gauge minimum.
- Finish: Powder-coated metallic silver sides, top, bezel, and base with blue lower doors.
- Hinged lower doors for easy service access without having to remove panels. 18-gauge minimum. Lockable.
- A panel shall be located at the top of the cabinet on each side for product identification.
- A hose hanger shall be provided for each hose outlet to keep the hoses off the island when not in use.
- Two (2) positive displacement, stainless steel sleeved, two-piston meters with Teflon piston cups.
- One (1) belt-driven gear type pumping unit with integral air separator. Vane pumps are unacceptable.
- One (1) 1-HP minimum 115VAC/230VAC continuous duty motor.
- An explosion-proof junction box shall be provided in the hydraulic cabinet to make all AC wire terminations.
- The junction box shall include a wire from the each reset to provide a reset complete signal to an external control system.
- Minimum 1" I.D. internal piping for maximum flow performance.
- A high flow Cimtek 400 Series internal filter with 10-micron element shall be included for each hose outlet.
- The dispenser shall be equipped with a 1" two-stage solenoid valve for each hose outlet.
- Supply inlet shall be 1 1/2" minimum. Inlet strainer shall be able to be removed vertically to prevent spillage when cleaning.
- Discharges shall be 1" with ¾" reducing bushings so that either ¾" or 1" hoses may be used.
- Nozzle boots/hooks for use with UL interchangeable automatic nozzles.
- Warranty: One year parts and labor except for the cabinet which shall be warranted against corrosion for 4 years.

Standards/Approvals: ADA compliant user controls per ANSI A117.1; C-UL-US listed; NYCFD and W&M approvals.

Model & Manufacturer: Dresser Wayne Reliance Model /G6202P/27AGJK/W1 (Dresser Wayne, Austin, TX).

Note: Specifications do not include hanging hardware that is typically required for operation of a fuel dispenser.
This includes fuel hoses, automatic nozzles, breakaways, and swivels.

PetroVend
FUEL CONTROLS

K800™ HYBRID FUEL CONTROL SYSTEM

Now with the flexibility of having the fuel site controller within the Fuel Island Terminal as a stand-alone system for sites that require outdoor installations, or as a separate unit indoors.

Whether operating a small fleet with a single fuel site or a large fleet with multiple sites, the PetroVend K800™ Hybrid Fuel Control System can help you improve the management of your unattended fueling operations by controlling one of your biggest assets and expenses – your fuel.

Benefits

- Ideal for small private fleets needing a low cost fuel management solution.
- Each Island Terminal controls up to 4 mechanical dispensers
- Each FSC3000™ can control up to 8 FITs with a maximum of 32 hoses per site
- Backlit LCD provides enhanced visibility in bright sunlight and at night
- Programmable prompts to guide drivers through the fueling process
- Durable metal keypad, 16-gauge steel enclosure and thermostatically-controlled heater for reliable operation in the harshest environments
- Downloadable software for easy system upgrades
- USB memory key for transaction backup/transfer and updating card files
- Optional dial-up or cell modem allows communication to remote locations
- Each K800™ Hybrid can also be outfitted with 802.11 WiFi or Bluetooth® communication devices to facilitate updates and retrieval of transaction data

SAVINGS
Ideal for small private fleets needing a low cost fuel management system.

EASY-TO-USE
Customizable prompts for driver clarity. ARTWare™ PC software makes configuration a snap.

INSTALLATION
Integrated FSC3000™ for installations where no building is available. USB key for transaction backup and card file updates.

COMMUNICATION
Optional 900 MHz wireless communication between island and building. Cell modem, Bluetooth® and 802.11 WiFi communication also available.

OPW®
FUEL MANAGEMENT SYSTEMS

LEADING THE WAY IN FUEL CONTROL INNOVATION

K800™ Hybrid Fuel Control System

K800™ Hybrid Fuel Control System Features

- Windows-based ARTWare™ PC software makes programming simple and provides system backup
- System management easily performed on-site or remotely via dial up, cell phone modem, LAN/WAN, or Bluetooth™
- Compatible with optional FleetLink™ RFID system, allowing vehicle I.D., mileage and other information to be automatically captured through the fuel nozzle at the vehicle's fuel fill tube
- Pump and product totals automatically or on demand
- System can be set to track the mechanical pump totalizers
- Daily and monthly allocation amounts
- Sixteen quantity restriction levels
- Sixteen product restriction combinations
- Odometer or hourmeter recording
- User can be prompted to enter miscellaneous data of up to ten digits (job, vehicle, driver ID, etc.)
- Single or dual card/key/cardless entry operation (driver/vehicle number)
- Cards can be assigned to accounts or departments
- Card/key/account lockout
- Programmable K800™ Fuel Island Terminal displays messages and user prompts
- A price may be assigned to each product to be recorded for each transaction
- Standard system utilizes magnetic cards
- ChipKey® mileage and reasonability assures accurate mileage entry
- Optional proximity card reader
- Programmable system open/close times
- Password protection for ultimate security
- Self-test and diagnostic utilities for start-up and troubleshooting
- Office journal printer for transaction logging
- USB key for transaction information backup and card updates
- Optional Bluetooth™ or cell modem communication for remote sites
- Optional 900 MHz wireless communication between island and building
- The K800™ Hybrid System interfaces with many commercial fueling networks

Memory

- Standard memory 2,000 proprietary cards, and 500 transactions
- Expandable to 64,000 proprietary cards, and 2,000 transactions

Pump Control Methods

- Pump Control Modules for Commercial Dispensers with mechanical registers
  - Mounted in Fuel Island Terminal for low-cost, convenient wiring
  - Mounted in remote cabinet
  - Pump Handle Monitor
  - Manual bypass for each dispenser
  - Four adjustable fueling timers
    - Maximum fueling time
    - Maximum time to activate pump handle
    - Maximum time until first pulse
    - Maximum time between pulses
  - Counts in gallons or litres from thousandths to full units
  - Pump sentry provides protection from faulty pulsers
- Direct Pump Control communicates via serial link to the dispensers (Optional)
  - Supports Wayne, Gilbarco and Tokheim protocols
  - Extremely simple installation
- Universal Pump Controller for operation with a pump controller (Optional)
  - Interfaces with Wayne, Gilbarco and Tokheim
  - Allows pumps to be controlled via the Fuel Island Terminal or retail pump console

Phoenix™ Software

- Phoenix™ Plus – poll transactions, perform card updates, run reports
- Phoenix™ Premier – all of the Phoenix™ Plus features, plus tank gauge interface for reconciliation

K800™ Hybrid Fuel Island Terminal Specifications

Readers (any one of the following):
- Magnetic-Stripe Card
- ChipKey®
- HID Proximity Card/Key (Optional)

Display: 2 line x 16 character Backlit LCD

Enclosure Dimensions: 12" H x 13" W x 10" D (30.5 cm H x 33 cm W x 25.5 cm D)

Power Requirements: 120/230 VAC 50-60 Hz 100 watts Max.

Operating Temperature: -40° F to 122° F (-40° C to 50° C)

Pump Control Terminal Specifications

Relay Rating: 1 HP, 120/240 VAC

Pulser Compatibility: Contact/12 VDC Electronic

Pulser Power Supply: 12 VDC; 40 milliamps max./pulser

Pulser Speed: 6,000 pulses/minute (mechanical)
100,000 pulses per minute (electronic)

Pulser Rate: 1:1 to 9,999:1 (in one-pulse increments)

Pulser Type: Single channel

Pulser Duty Cycle: 50%

Operating Temperature Range: -40° F to 122° F (-40° C to 50° C)

FSC3000™ Fuel Site Controller Specifications

Dimensions: 2" H x 10" W x 11" D (5 cm H x 25 cm W x 28 cm D)

Power Requirements: 85-240 VAC, 50/60 Hz; 25 watts max.

Operating Temperature Range (indoors): 32° F to 122° F (0° C to 50° C)

Serial Communication Ports: Petro-Net™ (RS-485), Printer (RS-232), Terminal (RS-232), Modem (RS-232), Pass-through (RS-232), 2 Auxiliary Ports (RS-232), Tank Gauge, Ethernet, USB

Maximum Petro-Net™ Distance: 5,000 feet (1524 m)

Since 1933
McKinney Petroleum Equipment, Inc.
P. O. Box 9099 / 3926 Halls Mill Road / Phone: 251-661-8800
Mobile, AL 36691 / Mobile, AL 36693 / Fax: 251-661-8821
Web Site: www.mckinneypetroleum.com

OPW FUEL MANAGEMENT SYSTEMS
ONE COMPANY. ONE WORLD. ONE SOURCE.
6900 SANTA FE DRIVE • HODGKINS, IL USA 60525 • www.opwfms.com • 708-485-4200 • (fax) 708-485-4630

NOTE: All information subject to engineering and/or other changes. All trade names are copyrighted. Patents Pending. ©2008 OPW Fuel Management Systems
©2008 Delaware Capital Formation, Inc. All Rights Reserved. DOVER and the DOVER logo are registered trademarks of Delaware Capital Formation, Inc., a wholly-owned subsidiary of Dover Corporation

K800D • 6/08 0M

CITY OF DAPHNE
PRICE QUOTATION

Item	Qty	QUOTE 1	QUOTE 2	QUOTE 3	QUOTE 4
1 CLARKE VANTAGE 17" AUTO SCRUBBER	1	$ 3400.00	$ 3449.00	$ 4599.00	$ 4052.33
2		$	$	$	$
3		$	$	$	$
4		$	$	$	$
5		$	$	$	$
6		$	$	$	$
7		$	$	$	$
8		$	$	$	$
9		$	$	$	$
10		$	$	$	$
11		$	$	$	$
12		$	$	$	$
TOTALS		$	$	$	$
TOTALS		$ **3400.00**	$ **3449.00**	$ **4599.00**	$ **4052.33**
	Vendor Contact Phone	DADE PAPER	SWEEPERLAND	VACUUMCLEANERS.NET	NATIONAL PAPER & SANITARY SUPPLIES

Reason for selection if lowest quote not selected:

Vantage 17

Compact Autoscrubber®

- **Compact and easy to maneuver**
- **Easy to operate**
- **Offset brush and squeegee**
- **Compete water pickup**
- **Very quiet operation**

The Vantage 17 is perhaps the most highly maneuverable and compact 17 inch autoscrubber® on the market with the features that provide the highest scrubbing performance.

The scrubber features a large opening to the recovery tank that allows for easy cleanout, maintenance-free gel batteries, long-life durable Polydur® tanks, ergonomic palm buttons, a start brush with brush and solution off in neutral, and an onboard battery charger.

The Vantage 17 is a basic model scrubber but with top-of-the-line features.

Clarke®

Trusted. Reliable. Efficient.

A Nilfisk-Advance Brand

SPECIFICATIONS	Vantage 17 - Battery	Vantage 17 - Electric
Part Number	9087124020	9087125020
Voltage	24 V	115 V / 60 Hz
Batteries	(2) 12 V 87 Ah gel	N/A
Solution Tank	8.2 gal	
Recovery Tank	7.7 gal	
Solution Flow Range	0.08 - 0.26 gal/min	
Squeegee Width	17 in	
Theoretic Battery Run Time	2 hours	
Vacuum Motor	330 W / 2-stage	550 W / 2-stage
Brush Motor	0.7 hp	0.75 hp
Brush Speed	135 RPM	150 RPM
Brush/Pad Pressure	51 lb	62 lb
Dimensions	44 in x 22 in x 41 in	
Weight	346 lb	217 lb
Sound Level	67 dB A	76 dB A
Warranty	Polydur Tanks - 8 Years, Parts - 3 Years, Labor - 1 Year Batteries - 18 months prorated	

Specifications are subject to change without notice.

What makes it easy to use?

- Compact size
- Simple controls
- Easy on/off brush

What enhances its productivity?

- Brush assist traverse
- Large tank capacity for its compact size
- Efficient utilization of solution
- Complete pickup

What adds to its durability?

- Polydur tanks
- Waterproof electrical components
- Rugged components

What are the accessories?

- Poly brush
- Medium grit brush
- Battery Maintenance System

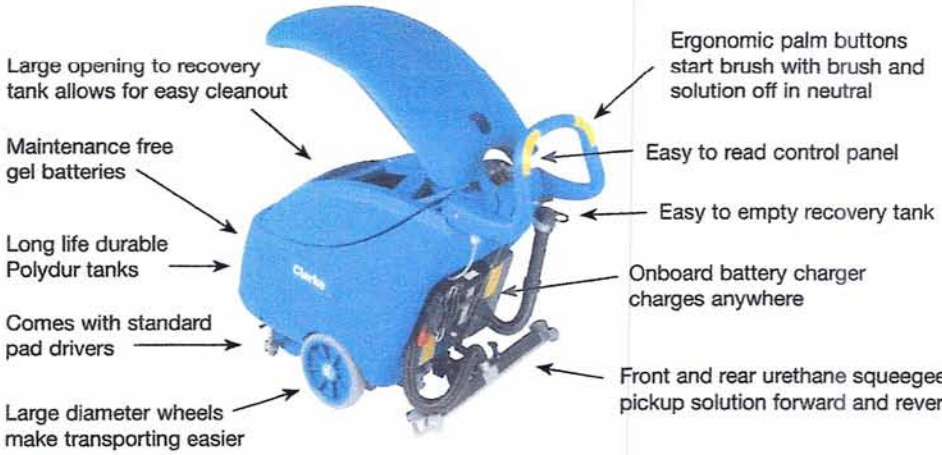

recyclable

14600 21st Avenue North • Plymouth, MN 55447-3408
Phone: 800.253.0367 • Fax: 800.825.2753

240 Superior Boulevard • Mississauga, Ontario, Canada L5T 2L2
Phone: 800.668.8400 • Fax: 800.263.5111

©2010 Nilfisk-Advance, Inc. All rights reserved. P/N 71199A 2/10

Clarke®

A Nilfisk-Advance Brand

www.clarkeus.com

30427-A County Road 49
Loxley, AL 36551-1180
800-844-5601
251-964-1500

DadePaper

Quotation

Presented to:
City Of Daphne

5/24/2011

Kara Ishmael

Item	Description	Qty	Price
	Clarke Vantage 17 inch Auto Scrubber	Each	$3400.00

OVER 15,000 ITEMS AVAILABLE

Bortek First in Power Cleaning Equipment

Call toll free

Frank Barnett

Thank you for your interest in Bortek Industries, Inc.

Make & Model: Clarke Vantage 17 Battery Autoscrubber
Part #: 9087124020
List Price: $4,599
Your Price: $3,449

Free Freight

NO Sales Taxes (Outside of PA, MD, NY, OH, NJ, WV, VA, IN, IL)

Full Manufacturers Warranties Apply

Price Subject to Change and are quoted for TODAY only!

We accept the following methods of payment
Credit Cards (Visa, MasterCard, & American Express)
Prepay by Check or Wire Transfer
Leasing Options are also available

Please feel free to contact our Equipment Sales Department with any questions you may have.

Bortek Industries, Inc. - Web Sales
4719 Old Gettysburg Road
Mechanicsburg, PA

Phone: 800.626.7835
Fax: 717.731.8230

Visit our Website at www.sweeperland.com.

Vacuum Cleaners - Homepage | Contact Us | Sitemap

VacuumCleaners INC

Call 1-888-VACUUM1
1-888-822-8861

Home Monthly Specials Top Rated Vacuums Return Policy Shipping & Tracking

0 items in cart
Subtotal: $0.00
Checkout

Search Vacuum Cleaners... SEARCH

Select Category...
Select Category Above...
Go

Select Brand...
Go

Lowest Price Online. Guaranteed.

MSRP: $4599.00
Price: $3679.20
Save: $919.80
Add To Cart

3 ways to BUY
Online
vacuumcleaners.net
By Phone
CALL: 1-888-VACUUM1
Live Chat
Click Here to chat with a specialist

Clarke Compact Floor Scrubber Vantage 17

(Part # Clarke Compact Floor Scrubber Vantage 17)

Clarke Vantage 17 Battery Or Electric
Compact Floor Scrubber

The Vantage 17 is perhaps the most highly maneuverable and compact 17" Autoscrubber on the market with just those features that provide the highest scrubbing performance. The scrubber features a large opening to the recovery tank that allows for easy cleanout, maintenance-free gel batteries, long-life durable Polydur tanks, ergonomic palm buttons start brush with brush and solution off in neutral, and an on-board battery charger that charges anywhere.

Features

- Compact and easy to maneuver
- Easy operation
- Offset brush and squeegee for close edge cleaning
- Complete water pickup with quiet operation

Specifications

Batteries	(2) 12v 80 Ah Gel
Voltage	24 vdc
Recovery Tank	7.7 Gallons
Solution Tank	8.2 Gallons
Solution Flow Range	.08 - .26 gal.min
Vac Motor	330 watts / 2 stage
Battery Run Time	2 hours (theoretical)
Squeegee Width	28.3"
Brush/Pad Pressure	51 lbs.
Brush Speed	135 RPM
Brush Motor	.7 hp
Dimensions (LxWxH)	43.9" x 22.4" x 41.4"
Weight with Solution	346.1 lbs.
Sound Level	67 dba (at operator ear)

Business / Commercial

Air Duct Cleaning Equipment
Air Movers / Floor Dryers
Automatic Floor Scrubbers
Backpack Vacuum Accessories
Backpack Vacuum Cleaners
Carpet Cleaning Chemicals
Carpet Extractor Accessories
Commercial Canister Vacuums
Commercial Carpet Shampooers
Commercial Floor Sweepers
Commercial Upright Vacuums
Commercial Wet & Dry Vacuums
Drum / Orbital Floor Sanders
Flood Restoration Equipment
Floor Buffers / Floor Machines
Floor Burnishers
Floor Machine Accessories
Hard Surface Tools
Hepa Wet Dry Vacuum Cleaners
Industrial Dehumidifiers
Industrial Pressure Washers
Janitorial Cleaning Supplies
Portable Carpet Spotters
Propane Floor Burnishers
Sanding Pads / Sanding Screens
Sanitaire Vacuum Parts
Sprayers
Wet & Dry Vacuum Cleaners
Wide Area Vacuums

Central Vacuum Cleaners

Central Vacuum Cleaners Units
Central Vac Installation Supplies
Central Vacuum Accessories
Central Vacuum Attachment Sets

Household / Residential

Air Purifiers / Cleaners
Ash Vacuums
Canister Vacuum Cleaners

Daily Special

Oreck 2200 Anniversary Editior Upright Vacuum Cleaner
~~MSRP: $349.99~~
Price: $199.99
Save: $150.00
Add To Cart

Featured Brands

AGGRESOR II
Austin
Avanti
BEAM CENTRAL VACUUM SYSTEMS
Electrolux

On-line Catalog

Switch. Save. Online. Win Control. Smile!

national paper & sanitary supply
Smarter. Faster. Simpler. Leading the Way.

Search

Product Description

Enter keywords... Go

Advanced Search

Full Catalog

- Beverage Supply
- Candy
- Chemicals
- Cleaning Supplies
- Cleaning Equipment
- Facility Maintenance
- Food
- Food Service
- Grounds Maintenance
- Hospitality
- Industrial Packaging
- Lighting
- Liners
- Matting
- Miscellaneous
- Office Supplies
- Paper
- Party & Special Occasion
- Receptacles / Trash
- Rest Room
- Retail Packaging
- Safety
- Skin Care
- Tools & Hardware
- Training
- Wood Flooring & Related

Catalog Type

- Complete Catalog
- Clearance
- Infection & Flu Prevention
- Green & LEED
- Slashes Paper Costs
- Slashes Utility Bills
- > Ecoli & Salmonella Killer <

Catalog : Cleaning Equipment : Scrubbers - Auto & Walk : Auto & Walk Behind Scrubbers

Clarke® Vantage 17 Compact Scrubbers

Available in battery and electric. Compact and easy to maneuver. Easy operation. Offset brush and squeegee for close edge cleaning. Complete water pickup with quiet operation. Brush motor: .7 hp. 43.9" L x 22.4" W x 41.4" H.

Add To Cart

	Quantity	UOM	Price
AL-908712402 **Clarke® Vantage 17 Compact Scrubber - Battery** Battery, ea		EA	Others: 7,654.40/EA Wholesale: 4,052.33/EA
AL-908712502 **Clarke® Vantage 17 Compact Scrubber - Electric** Electric, ea		EA	Others: 5,112.00/EA Wholesale: 2,706.35/EA

Add To Cart

Switch. Save. Online. Win Control. Smile!

800-647-2737

Contact Us

© 2009. National Paper & Sanitary Supply, Co. All rights reserved.

Fred Small
Mayor

David Cohen
City Clerk

Kimberly Briley
Finance Director/Treasurer

Richard D. Johnson, P.E.
Director of Public Works

CITY OF DAPHNE, ALABAMA
PUBLIC WORKS
MAINTAINING A QUALITY OF LIFE

Bailey Yelding, Jr.
District 1

Cathy Barnette
District 2

John L. Lake
District 3

Kelly D. Reese
District 4

Ronald Scott
District 5

Derek Boulware
District 6

August Palumbo
District 7

Memorandum

To: Councilman Bailey Yelding, Chairman; Public Works Committee

Thru: Honorable Mayor Fred Small

From: Richard D. Johnson, P.E.; Public Works Director

CC: Jay Ross, Chief Counsel; File

Date: June 6, 2011

Re: Motion for Legal Action against Thompson Engineering – Errors and Omissions - May Day Park Boat Ramp Project

---

Mr. Mayor and Chairman:

I am seeking a Motion from the Public Works Committee to the full City Council for one of the following two options:

1. *To instruct the City Attorney (Jay Ross – Ross & Jordan) to initiate informal contact with Thompson Engineering in order for them to reevaluate the design, prepare a remediation plan, and effectuate the rebuilding/replacement of the ramp at their expense to address the failure of the original design to allow unobstructed movement of sand.*

2. *To instruct the City Attorney (Jay Ross – Ross & Jordan) to issue a letter of demand to Thompson Engineering instructing them to reevaluate the design, prepare a remediation plan, and effectuate the rebuilding/replacement of the ramp at their expense to address the failure of the original design to allow unobstructed movement of sand. The letter should give expected deadlines for Thompson Engineering to remedy said faults.*

This is request is prompted by two factors. First, Thompson Engineering's failure to respond to my letter, dated May 17, 2011, requesting the start of the process to resolve the deficiencies in the design. Second, as of today, Monday, June 6, 2011, the ramp is once again fully choked with accumulated sand. Within days it will be unusable.

I have attached the Executive Summary of Dr. Scott Douglas' 1st Annual Sand Study Report and my subsequent letter to Thompson Engineering for background purposes. Today we have a very expensive new ramp that suffers the same condition as the one it replaced: sand entrapment and starvation of adjacent shoreline. The reason the City initiated the project in the first place was to alleviate the condition and bring us into compliance with Federal and State coastal regulations. The design engineer selected for this project knew that the main objective of the design was to insure unobstructed sand movement along the shoreline. The ramp project has failed to achieve that required outcome.

Yours,

RDJ

Attachments: Executive Summary - 1st Annual Sand Study Report
Letter to Thompson Engineering – May 17, 2011
Pictures – May 3 & 5 and June 6, 2011

MAYDAY PARK

COASTAL ENGINEERING MONITORING:

FIRST ANNUAL REPORT

Prepared for the

CITY OF DAPHNE, ALABAMA

April 12, 2011

by
South Coast Engineers, LLC
P.O. Box 72
Fairhope, Alabama 36533

EXECUTIVE SUMMARY

This is the first annual report on the results of a monitoring program established to document and understand any changes on the beaches due to the construction of the new Mayday Park boat ramp. The data and analyses provide a reasonably clear picture of both the response of the beaches to the construction of the new ramp and the wave-driven processes that caused the response. The primary forcing function is documented by a wave and sand movement analysis and the beach response is documented by air photos, beach profile surveys, ground-level photos, and shoreline mapping. The data have been collected over 15 months including four sets of field data. Due to construction delays, the monitoring period covers only 5 to 6 months since construction. However, the patterns are clear and likely to become more severe with time.

There is sand deposition, or trapping, on the beach around, under, and on the south side of the new ramp. There is erosion on the beaches to the north that can be primarily attributed to this trapping at the new ramp. The new boat ramp is be acting as a total littoral block.

The new ramp has not functioned as originally conceived. It has not allowed wave-driven sand to migrate along the bulkhead under the ramp and there are two possible reasons. One reason is related to the 2010 construction sequence and the other is related to the design of the new ramp. Concerning the construction sequence, the use of a nearshore barge during the late summer months of 2010 led to a sand-choked system. The wave and sand movement analysis done for this study shows that those summer months were a time when sand was moving to the north at its greatest rate during the year. Thus, the system may not have ever had a chance to work as conceived because it was choked with sand from the beginning, i.e. the day after construction. A similar construction-barge related problem occurred in 2006 when the Mayday Pier was repaired after Hurricane Katrina. The presence of that construction barge in the summer of 2006 functioned like a breakwater and trapped sand causing problems around the boat ramp for years after construction ended.

A second possible reason for the failure of the new ramp to function as originally conceived is that the design of the ramp is not as "transparent to the incoming waves as possible." In particular, the ramp may be designed at too low of an elevation. Of specific concern is the elevation of the pile caps or bents that support the ramp deck. They appear to be too low at that width and distance from shore and may be functioning as nearshore breakwaters - trapping sand under the ramp. The new boat ramp design may have to be modified to achieve sand movement past it.

Prior to any modification, attempts could be made to mechanically remove the sand from under the ramp and from the beach build-up around it. Much of that sand was originally trapped during construction in 2010. The system might function better if is cleared of sand one time. Subsequent observations could then ascertain if a design modification is required. If the sand is completely cleaned out once, and then gets trapped again in the lee of the ramp under natural wave and tide conditions, then it is recommended that the ramp be redesigned at a higher elevation and in a manner to make it more transparent to the waves.

Fred Small
Mayor

David Cohen
City Clerk

Kimberly Briley
Finance Director/Treasurer

Richard D. Johnson, P.E.
Director of Public Works

CITY OF DAPHNE, ALABAMA
PUBLIC WORKS
MAINTAINING A QUALITY OF LIFE

Bailey Yelding, Jr.
District 1

Cathy Barnette
District 2

John L. Lake
District 3

Kelly D. Reese
District 4

Ronald Scott
District 5

Derek Boulware
District 6

May 17, 2011

Micah Jones, P.E.; Project Engineer
Thompson Engineering, Inc.
218 N. Alston St.
Foley, AL 36535

RE: May Day Park Boat Ramp Project

Dear Micah:

I am writing you to inform you of the current condition and performance of the May Day Park boat ramp designed by Thompson Engineering. I have attached the Executive Summary of Dr. Scott Douglas' 1st Annual Sand Study Report. As you know, Dr. Douglas is the leading Coastal Engineering expert in the region and is under contract with the City of Daphne to monitor, study, evaluate and report on the success of sand transport along the waterfront of May Day Park. His first year conclusions are disappointing to say the least. He has determined that the ramp is not facilitating the required sand transport both to the north and the south. By April 15th, a mere six months after project completion, a pocket beach had formed along its entire length and the ramp, fully clogged with sand, was rendered unusable.

Dr. Douglas listed two possibilities that were the potential cause of the sand transport failure: sand and debris blockage due to construction practices employed by the contractor or a ramp design that fails to be transparent to incoming waves. As an initial action, he recommended the City remove all the sand to the south and the north of and from under each span. The City dredged under each span and over excavated on both sides in an attempt to maximize the possibility of successful sand transport. At the conclusion of the dredge operation, all spans were cleared of sand and unobstructed water and wave flow underneath the spans had been achieved. This operation concluded Friday, April 29, 2011. This is the second sand lift operation undertaken by the City since substantial completion of the project. In excess of 800 cubic yards of sand has been removed from around and under the structure and moved to the north since construction. Today, two weeks after the most recent dredge operation the first two

spans are once again fully occluded with sand. At the current rate of sand entrapment the ramp will again be rendered unusable by the start of summer.

Based upon Dr. Douglas' findings it can be concluded that the sand entrapment is not due to the initial blockage of sand and debris left over from construction, but to shortcomings in the design. The scope of the project was specific in that the design must meet the parameters outlined in the original sand study: *May Day Park Coastal Engineering Analysis and Recommendations*, *September 30, 2008, South Coast Engineers, LLC; Dr. Scott Douglas, P.E.* Specifically, the design must achieve transparency to wave action, have no longitudinal or lateral structural components that would act as an offshore breakwater, conform to a minimum span to width ratios and allow uninterrupted sand transport both to the north and the south. It appears that none of these parameters were incorporated in the delivered design. The grant that partially funded this project was specifically tied to the original sand study and that the outcome of the design must meet the objectives of that study.

Today, after much time and expense, there exists a ramp that suffers the same condition as the one it replaced: sand entrapment and starvation of adjacent shoreline. The reason the City initiated the project in the first place was to alleviate the condition and bring us into compliance with Federal and State coastal regulations. The ramp project has failed to achieve the required outcome. Resolution is required. Thompson, via the acquisition of Moore Engineering, was engaged to deliver a product to resolve the sand transport issue and that mission has not been accomplished.

I am requesting that Thompson reevaluate the design, based on Dr. Douglas' recommendations, and submit to the City a remediation plan to address the ramp's shortcomings. The City has acted in good faith during this project and we desire the same from Thompson. The City must be made whole and be delivered a serviceable boat ramp for our Citizens. This request is made without the formality of a Council or Legal deliberation. However, if an amicable solution to the problem cannot be achieved, I fear that will be the only route for the City to be made whole.

I look forward to your contact and the start of the process to resolve this issue once and for all.

Yours,

Richard D. Johnson, P.E.
Director of Public Works

Cc: Honorable Fred Small, Mayor
A.G. Campbell, City of Daphne
Councilwomen Cathy Barnette, President
Jay Ross, Chief Counsel
Dr. Scott Douglas, P.E.
File

April 11, 2011 – All spans clogged with sand – travel way of ramp is blocked

April 11, 2011 – All spans clogged with sand to waterline

April 11, 2011 – All spans clogged with sand to waterline

May 5, 2011 – All spans cleared of sand – shoreline retracted to normal

May 3, 2011 – All spans cleared of sand – boardwalk being reassembled

June 6, 2011 – All spans clogged with sand – large pocket beach on south side

June 6, 2011 – All spans clogged with
sand to waterline

June 6, 2011 – Large pocket beach – view
to the south

June 6, 2011 – Sand spilling onto travel
way of ramp – view to west

Unnamed Rights-Of-Way/Drainage Easement - Acquisition and Acceptance for Maintenance

Motion: Accept Unnamed Rights-Of-Way, as shown in the attached Exhibit A, for acquisition and maintenance of by the City of Daphne, subject to conveyance by Rights-of-Deed from owner.

"Exhibit A"

Legal Description:

The North Thirty Five (35) feet of Lot 11, Block 1, Randall's Subdivision, as shown by map or plat thereof recorded at Miscellaneous Book 1, Page 227, Probate Records, lying in Section 17, Township 5 South, Range 2 East, Baldwin County, Alabama.

Baldwin County
Revenue Commissioner

Copyright 2000

Property Appraisal Link

BALDWIN COUNTY, AL

Current Date **6/22/2011**

Tax Year 2010
Valuation Date October 1, 2009

OWNER INFORMATION

PARCEL 43-04-17-4-000-020.000 **PPIN** 001330 **TAX DIST** 04
NAME AUTRY, EARLSEY L & CORA (SYKES, LOIS-ATT
ADDRESS P O BOX 123
ROANOKE , AL 36274
DEED TYPE IN **BOOK** 0000 **PAGE** 0795598
PREVIOUS OWNER POLLARD ROAD L L C
LAST DEED DATE 9/30/2004

DESCRIPTION

35' X 525'(S) IRR LOT 11 BLK 1 RANDALL SUB LESS RD R/W PB1 P G227 IN THE CITY OF DAPHNE SEC 17-T5S-R2E (POA) DB101 PG455

PROPERTY INFORMATION

PROPERTY ADDRESS RANDALL AVE
NEIGHBORHOOD DAPHNE
PROPERTY CLASS **SUB CLASS**
SUBDIVISION 08RS **SUB DESC** RANDALL'S SUBD
LOT 11 **BLOCK** 1
SECTION/TOWNSHIP/RANGE 00-00 -00
LOT DIMENSION **ZONING** R-2DP

PROPERTY VALUES

LAND:	1000	**CLASS 1:**		**TOTAL ACRES:**
BUILDING:		**CLASS 2:**	1000	**TIMBER ACRES:**
	=========	**CLASS 3:**		
TOTAL PARCEL VALUE:	1000			

DETAIL INFORMATION

TYPE	REF	METHOD		DESCRIPTION	LAND USE	TC	HsPn		VALUE
LAND	1	BV	BS-1000	X	4500	2	N	N	1000

View Tax Record

Back

Home | Search | Real Property | Appraisals | Terms of Use | Privacy Policy | Contact Us | Help

Fred Small
Mayor

David Cohen
City Clerk

Kimberly Briley
Finance Director/Treasurer

Richard D. Johnson, P.E.
Director of Public Works

CITY OF DAPHNE, ALABAMA
PUBLIC WORKS
MAINTAINING A QUALITY OF LIFE

Bailey Yelding, Jr.
District 1

Cathy Barnette
District 2

John L. Lake
District 3

Kelly D. Reese
District 4

Ronald Scott
District 5

Derek Boulware
District 6

August Palumbo
District 7

Memorandum

To: Councilman Bailey Yelding, Chairman; Public Works Committee

From: Richard D. Johnson, P.E.; Public Works Director

CC: Honorable Mayor Fred Small; File

Date: May 16, 2011

Re: Resolution 2007-66 "Establishing an Environmental Advisory Committee" EAC

Mr. Chairman:

It is my recommendation that Public Works Committee requests action of the full Council to appoint the required members in order to establish the Daphne Environmental Advisory Committee (EAC) envisioned in the attached Resolution 2007-66.

A functioning and supportive EAC can assist in the betterment of our Community and the protection and preservation of our valued natural resources. Furthermore, it is my recommendation that the Environmental Programs Manager be nominated and appointed as standing Committee Member.

Prior to any recommendation to the full Council, the Public Works Committee should establish three goals/objectives for the EAC. This would assist Council members in identifying appropriate people to serve on the EAC and help focus the Committee once formed.

Here are my recommendations for these three immediate goals:

Recycling - The Committee would research, investigate, deliberate and make recommendations on how the City through Public Works/Solid Waste can increase the participation in and volume generated by our Recycling Program. They could assist in the identification of potential sources of grants, help prepare grant proposals, and give support to outreach and education.

Environmental Project Funding - The Committee would establish a “Top Ten” List of Environmental Projects needing mitigation within the City (Much in the same fashion as the Beautification Committee’s list). They also would have responsibility of identifying potential funding sources and assist in the research and writing/preparing of grant documents to obtain the necessary funding. This function of the Committee would work closely with the City’s Environmental Programs Manager.

Regulatory Counsel - The Committee would be charged with review of all City Ordinances and research of other jurisdiction’s regulations, policies, ordinances and programs involving environmental stewardship and oversight. They would periodically make recommendations on changes, upgrades, clarifications and new policies for City ordinances. They would have a main goal of making recommendations for the establishment of City specific Post Development Storm Water Treatment Standard. Also in this role they would serve as liaisons to all other Environmental Advisory Groups within the County and Region.

These are my recommendations. The Mayor and Council may have better or more immediate objectives in mind. I am attempting to spur the process forward in these recommendations. It is our City Leaders saw the need and put in place the tools, now is the time to implement the plan.

Yours,

RDJ

Attachments: Resolution 2007-66

CITY COUNCIL MEETING
REPORTS OF SPECIAL COMMITTEES

NOTES:

BOARD OF ZONING ADJUSTMENTS REPORT:

DOWNTOWN REDEVELOPMENT AUTHORITY REPORT:

INDUSTRIAL DEVELOPMENT BOARD:

LIBRARY BOARD:

PLANNING COMMISSION REPORT:

RECREATION BOARD REPORT:

UTILITY BOARD REPORT:

To: Cathy Barnette, Council President
From: Adrienne Jones, Director
Community Development
Subject: BZA Appointment
Date: June 29, 2011

MEMORANDUM

Mr. Barry Taylor's term on the BZA expired June 2011 and he has elected to resign due to other commitments.

The Council is the governing body that appoints members to the BZA. A term is three (3) years from date of appointment. I respectfully request that the Council appoint a new member as an Alternate on the Board of Zoning Adjustment.

Thank you,

/ph

cc: Mayor Small, Becky, City Clerk's Office
File

Becky

From: Pat Houston [redacted]
Sent: Tuesday, June 28, 2011 8:12 AM
To: 'Becky'
Subject: FW: Re-Appointment

From: Barry L. Taylor [redacted]
Sent: Friday, June 24, 2011 12:23 PM
To: Pat Houston
Subject: Re: Re-Appointment

Ms. Houston:

Given the family and professional obligations I have, I think it would be in the best interests of both the City of Daphne and myself to not submit my name for reappointment.

While I have thoroughly enjoyed serving on the BZA, Daphne needs an individual who can devote more time than I can currently allocate.

Please let me know if you need me to fill out any departure-related paperwork.

Thank you very much.

Kindest regards,

Barry

Barry L. Taylor
Senior Field Support Engineer
National Security Group
Oracle North America
Daphne, Alabama

DOWNTOWN REDEVELOPMENT AUTHORITY
DAPHNE, AL
1705 MAIN STREET **DRAFT**
JUNE 27, 2011
5:15 P.M.

1. CALL TO ORDER/ROLLCALL

Casey Zito called the meeting to order at 5:25 p.m.

Members Present: Casey Zito; Ronald Nero; Ken Balme.; Kelly Hughes;

ABSENT: Doug Bailey; Mary Beth Mantiply.

Also present: Rebecca Hayes, recording secretary; Dorothy Morrison, Beautification Committee.

Absent: Cathy Barnette, council liaison.

2. ADOPT MINUTES / MAY 23, 2011

MOTION BY Ken Balme to approve the May 23, 2011 meeting minutes. ***Seconded by Ronald Nero.***

AYE ALL IN FAVOR NAY NONE OPPOSED MOTION CARRIED

3. OLD BUSINESS

Stacy McKean, grant writer, will be at the July meeting.

Mini-Grant Application:

Members discussed the application for the mini-grants. They agreed that the purpose of the mini-grants is for the beautification of the fronts of the businesses in Olde Towne. They discussed ideas for the grant, with parameters, and how to make it user friendly. The members decided to take the sample grant application home to come up with ideas for drafting the application. Discussion was held on having a focus group meeting with business owners in the district to acquaint them with the goals of the Downtown Redevelopment Authority, and to discuss the grants with them. They also want their input for the downtown area. They will compile a list of businesses in the Olde Towne Overlay District, and will try to do this for the July meeting.

4. TREASURERS REPORT:

There is $50,149 in the DRA account. Casey will be contacting Kim Briley regarding establishing a bank account.

5. NEW BUSINESS

The members agreed to change the time of their meeting to 5:30 p.m.

6. REPORT ON BEAUTIFICATION PROJECTS / DOROTHY MORRISION

Dorothy reported that the gazebo in Centennial Park is almost complete. She also reported that the Beautification Committee met at Kentucky Fried Chicken for their last meeting to discuss how to improve the area in front of the business at the point where Scenic 98 turns off US Highway 98. The committee discussed doing tiered plantings on the point.

7. NEXT MEETING

The next meeting will be July 25, 2011 at 5:30 p.m.

8. ADJOURN

The meeting adjourned at 6:30 p.m.

Respectfully submitted,

Downtown Redevelopment Authority

THE CITY OF DAPHNE
PLANNING COMMISSION MINUTES
REGULAR MEETING OF MAY 26, 2011
COUNCIL CHAMBERS, CITY HALL - 5:00 P.M.

CALL TO ORDER:

The number of members present constitutes a quorum and the regular meeting of the City of Daphne Planning Commission was called to order at 5:05 p.m.

CALL OF ROLL:

Members Present:

Fred Small, Mayor
Joe Lemoine, Secretary
Victoria Phelps
Larry Chason, Vice Chairman
Cathy Barnette, Councilwoman
Chief James "Bo" White

Members Absent:

Dan Gibson
Don Terry
Ed Kirby, Chairman

Staff Present:

Adrienne Jones, Director of Community Development
Jan Dickson, Planning Coordinator
Nancy Anderson, GIS Manager
Erick Bussey, Associate Attorney

Staff Absent:

Richard Johnson, Public Works Director
Ashley Campbell, Environmental Programs Manager
Jay Ross, Attorney
Missty Gray, Attorney

Others Absent:

Rob McElroy, General Manager/Utilities Board of the City of Daphne
Danny Lyndall, Operations Manager/Utilities Board of the City of Daphne

The first order of business is the call to order.

Vice Chairman: Please let the record Mr. Kirby, Mr. Gibson and Mr. Terry are not present.

THE CITY OF DAPHNE
PLANNING COMMISSION MINUTES
REGULAR MEETING OF MAY 26, 2011
COUNCIL CHAMBERS, CITY HALL - 5:00 P.M.

In the Chairman's, Mr. Ed Kirby, absence, the meeting was run by the Vice Chairman, Mr. Larry Chason.

The next order of business is the approval of the minutes.

APPROVAL OF MINUTES:

The minutes of the April 28, 2011 regular meeting were considered for approval.

Vice Chairman: A copy of the minutes was furnished to us previously. Do any of the Commissioners have any questions or comments? If there are no additions, deletions, or corrections at this time, the Chair will entertain a motion.

A **Motion** was made by Ms. Phelps and **Seconded** by Mr. Lemoine ***to approve the minutes of the April 28, 2011 regular meeting as submitted. The Motion carried. Mayor Small abstained due to his absence at the meeting.***

The next order of business is an administrative presentation for Veteran's Pointe.

ADMINISTRATIVE PRESENTATION:

Presentation to be given by Dr. Barry Booth, the owner, requesting an exempt replat review of Parcel 05-43-04-0-001-014.000 owned by Dr. Barry Booth, in accordance with Article 11-5 of the Land Use and Development Ordinance in order for the owner of Veteran's Pointe to deed the lot created to the City of Daphne. Currently zoned B-2, General Business and located northeast of the intersection of U.S. Highway 98 and Old Spanish Trail.

Withdrawn by the owner.

The next order of business is an administrative presentation for Lots 8 and 9 of the Renaissance Center Subdivision, Phase 3.

ADMINISTRATIVE PRESENTATION:

An introductory presentation was given by Mr. Trey Jinright, representing Jade Consulting and Renaissance Center, L.L.C., requesting an exempt replat review of Lots 8 & 9, the Renaissance Center Subdivision, Phase 3 in accordance with Article 11-5 of the Land Use and Development Ordinance to move an interior lot line to reconfigure the two lots. The lots are located on U. S. Highway 90, northeast of the intersection of Renaissance and Frederick Boulevard.

Mr. Jinright: It is currently zoned B-2, General Business. All we are doing is moving an interior lot line in order to accommodate the proposed use. I will be happy to answer any questions you may have.

Vice Chairman: Ms. Barnette, you have been too quiet. Do you have any comments since you were not at site preview?

Ms. Barnette: I think the application is pretty straightforward.

Vice Chairman: Do any of the Commissioners have any questions or comments? If there is no objection, the Chair will entertain a motion.

A **Motion** was made by Ms. Barnette and **Seconded** by Mayor Small ***to approve an exempt replat review to move the common interior lot line between Lots 8 & 9, Renaissance Center Subdivision, Phase Three. The Motion carried unanimously.***

The next order of business is an administrative presentation for Yancey Branch Subdivision, Unit II.

ADMINISTRATIVE PRESENTATION:

An introductory presentation was given by Mr. Bill Long, representing YBW II, requesting the release of the ten thousand dollar maintenance bond (certified cashiers' check) for Yancey Branch Woods Subdivision, Unit II.

Vice Chairman: How do you feel since the last meeting?

Mr. Long: Well, a lot of things have come to light. We sent a letter this afternoon accepting your proposal.

Vice Chairman: I have not seen that letter. Have you Adrienne?

Ms. Jones: We received the letter via email from Mr. Richard Davis, Davis & Fields, P.C. Mr. Davis said they will allow the funds to be used. They would like the balance returned as soon as the work is done.

Vice Chairman: Mr. Davis is not here tonight, but at the work session Mr. Johnson had provided an estimate for the City to do this work. I can remember my question at the work session. I asked Ms. Gray what responsibility would the City have if they used the funds for the construction of the storm drain pipe in this easement? Do any of the Commissioners or Mr. Long have any questions or comments? The item on the agenda was to return the bond or the cash. We need to vote on not returning it or should we have anything to do with the Division of Public Works or the work that is being done?

Mayor Small: I think we could make a motion to allow Staff to release the balance of the funds if any are remaining after the completion of the drainage project, then it would not have to come back to us unless you wanted it to come back to us.

Vice Chairman: If it were to come back to us, then it would be for Mr. Johnson to stand up there and say that it is done. I would at least in my mind, like for it to be his call.

Ms. Barnette: I am ok with that.

Vice Chairman: I need a motion I guess to that effect.

Ms. Phelps: Can I just ask a question?

Vice Chairman: Sure.

Ms. Phelps: So you did agree to allow Public Works to do the work?

Mr. Long: Our problem is not with the City.

Ms. Phelps: So what we came up with is a maximum dollar amount?

Vice Chairman: That is not what we are saying. That is not the maximum dollar amount. That is an estimate. We have ten thousand dollars cash and a six thousand five hundred dollar estimate.

Mayor Small: I do not think you should say anything about the money. He may decide to hire a contractor.

Vice Chairman: The only motion we are going to make is that we are not refunding the ten thousand dollars at this time until Public Works is satisfied. Do any of the Commissioners have any questions or comments? If there is no objection, the Chair will entertain a motion.

A **Motion** was made by Mayor Small and **Seconded** by Ms. Barnette ***to allow Staff to release the balance thereof or the ten thousand dollar maintenance guarantee (certified cashiers' check), upon completion and inspection of the installation of the storm water drainage pipe in the easement of Yancey Branch Woods Subdivision, Unit II and acceptance by the Public Works Director. The Motion carried unanimously.***

Vice Chairman: For my clarification, the reason you worded the motion that way is they may hire a contractor to complete the work or get someone else to pay for it.

Vice Chairman: If in that case, Mr. Johnson comes back in here and says he is satisfied, then we can refund the full ten thousand dollars.

Mayor Small: We could refund the full ten thousand dollars. We do not care who does it.

Vice Chairman: I understand that now we move onto the Interstate Corridor Sign issue. Ms. Jones.

The next order of business is an administrative presentation of a proposed amendment to the Daphne Land Use Ordinance.

ADMINISTRATIVE PRESENTATION:

An introductory presentation was given by Ms. Adrienne Jones, the Director of Community Development, of a proposed amendment to the Daphne Land Use Ordinance regarding the creation of an Interstate 10 Overlay District. What I have prepared is a booklet of the information you asked for last week. You wanted to have a comparison of the Overlay and General Sign Provisions. I have also included a table of all of the parcels that are not included in an overlay district and abut Interstate 10. On page three, I have listed nine properties ranging from four acres to one hundred and thirty acres. On page four, you have information on the properties on the north side of Interstate 10 abutting the right-of-way. Those properties range in size from twenty-nine acres to as small as two acres. At the bottom of page four, I have included information collected from Mr. Tom Hickman, New Horizons Retail Development, which outlines the elevation of the interstate, the proposed elevation of the sign, and impairment that is caused by the mound of dirt which is in the right-of-way. He also provided pictures from the sight line sign study, although it is not a true sight line study because it does not present a recommendation. It shows pictures from different places along Interstate 10. At the end of the packet is an outline for an ordinance. This is basically the one you used to do the Jubilee Retail Overlay District Ordinance. I took out all of the references to Jubilee and plugged in a title I came up with which is subject to change. I also left out specific numbers with regard to height leaving that detail up to you. We have maps on display that depicts the contours of the properties that adjourn Interstate 10. After the sign information there is, a page called page one that gives some points for you to begin discussion on it.

Vice Chairman: Before we discuss this, is there something you would like to discuss with us regarding City Council and Planning Commission's action here?

Ms. Barnette: Yes. The City Council has not asked the Planning Commission for a recommendation. I can read Councilman Palumbo's comments, but most everyone received them. Councilman Palumbo sent an email for me to read into the record, "Council President Barnette, this matter has never been discussed in any City Council meeting. It is not within the purview nor the jurisdiction of the Planning Commission to proffer and propose business districts. Any matter such as this should be initiated by the Council, which has the sole legal jurisdiction to create such districts. Please read this email into the record of the May 26, 2011 meeting. Regards, August A. Palumbo, Daphne City Council."

Vice Chairman: Does anyone want to comment on that?

Mayor Small: I think any overlay district that has ever been written this body has done it. This is a zoning ordinance. Not to take anything away from the City Council, but I think we have the information here to create the framework to send to City Council.

Vice Chairman: Is it not correct the other two overlay district ordinances were initiated by the Planning Commission?

Mayor Small: I will agree.

Ms. Barnette: I will disagree. I do think the Planning Commission does have the jurisdiction. I think the issue there is the City Council is not sure they are interested in creating an overlay district.

Vice Chairman: How do you know that until you have something to consider?

Ms. Barnette: That was discussed at the City Council work session in May, and it was not determined whether or not they wanted to create a district or not. If this body wants to send something forward, they have every right to do so.

Mr. Lemoine: We could come up with the best plan possible, and the City Council could just through it out the window.

Vice Chairman: I do not think that anyone is arguing we do not have any authority to make it an ordinance. It would be an amendment to the Daphne Land Use Ordinance. Every time you amend the Ordinance, the City Council has to approve it. No one has any idea what they would want to do, but if they decided to create a third overlay district, then it would be our job to do that. I guess to some degree it is the chicken and the egg as to what to put forward first. The Planning Commission and the City Council have heard the same presentation from the applicant so everybody is on the same page. I think it is in order for the Planning Commission to make a recommendation and for them to act on it, however, they want to act on it.

Mayor Small: One thing, the City Council was given a little deeper presentation than we were. I had not seen the signage. I told Mr. Hickman it is very important we discuss that before we bring it to anybody. In my opinion, what is shown here in this particular sight line study is too high. It is not what we want the signs in our corridor to look like. I think everyone would like to get together an ordinance I think you encompass the rest of the interstate. We should set a certain height above the road bed so that it does not matter how deep of a hole the sign will be in. Also, you always have the question of a developmental sign. I think we need to discuss how many lots or acres you must have in order to qualify for a developmental sign. If we do this, then a developer or a big box store which comes to the City of Daphne will know what they are up against. I do not think I have to tell a lot of you this, what magnitude Academy Sports would have on Daphne. It is unfortunate that it did not work in Jubilee Retail Overlay District. That is not Academy Sports' fault.

Mayor Small: The developer could not afford to put them there. Monetarily, it may be to their advantage because it will generate a lot of sales tax. The Jubilee Square Shopping Center has been falling behind for several years paying off the debt the way that deal was structured. The shopping center has a lot of catching up to do before you will know what the City will net from the Jubilee Retail Overlay District even if they bring in new businesses, but that is going to take a while. Here you have something that if everyone can agree on it has two other building pads which are ready. I think they will attract some higher end restaurants. I think it is an economic opportunity. That is why the City installed the utilities along U.S. Highway 90. I think there is a different aspect of signage on the interstate than we have in downtown. Where I am located, I am not interested in having a bigger sign than what I have. If I was going to be on the interstate, and I was going to spend the type of money I was going to spend down there, then I would want to be able to advertise my business. I told Mr. Hickman it was imperative we have with this so everyone could start looking at it. The biggest issue with this development is one sign that will be on the interstate. We are in discussions with the Alabama Department of Transportation to see if the hill near the interstate can be removed to help their sight line considerably. I was the one that who asked Ms. Jones to start on this. Actually, this body did. I felt after talking to this body that most of us wanted to be involved in this to some degree.

Ms. Phelps: By taking this at the Planning Commission level and looking at the entire corridor, it is a way that may help us. At times, it almost seems as we are being held hostage. A developer comes in and all he wants is a one hundred and twenty foot and one hundred and fifty-foot tall sign. It is always bigger, taller and better. By looking at this economic producing zone and establishing some guidelines, then they can decide how they want it to develop as well. It is the type of thing where we get pressured to do something more than we feel comfortable with and the types of things we hold dear to Daphne. We agree with having signage, but we also agree if it is appropriately done, varying sizes of signage should exist. On U.S. Highway 98, the sign height is twenty-one feet. On the interstate corridor, you can have a forty-five foot sign if you have five hundred linear feet in the Eastern Shore Park District. If you are in the Jubilee Retail Overlay District, then you have to have two hundred feet of linear feet on the interstate, and you can have a forty foot tall sign. If you have a grouping of three or more businesses, then you can have a developmental sign. They are going to bring in two more vendors, and one of them is not going to have any interstate signage. When they addressed the City Council, I attended that meeting. They asked to be included in the Jubilee Retail Overlay District and allowed to have another developmental sign. I think we should be able to come up with something, forward to the City Council and move on from there. To usurp our responsibility and do nothing would be wrong.

Vice Chairman: Do any of the Commissioners have any questions or comments?

Chief White: I would like to ask the Mayor a question. You mentioned the possible removal of the hill, would that have an impact on the sign or the building?

Mayor Small: The building.

Chief White: You also mentioned that the sign is too tall.

Mayor Small: That is just my personal opinion. I was just sitting here reading the map, the topography and trying to determine by the sight line photographs where the sign would be. If it were I, I would bring the sign down considerable, clear out the trees, and get the sight line that way amongst the trees. The Pine trees are just going to be limbed at the very top. Eventually when they are all done, you can see the sign through the trees.

Vice Chairman: What I think is the order of business here is we keep flip flopping back to a three-lot subdivision and Academy Sports and then we flip back to the overlays we have and the comparison of those. Ms. Jones has furnished us with the information. We also have an area on the north side of the interstate. I do not think we need to discuss the wants, needs, desires and wishes of Academy Sports. This is going to be the Planning Commission and the City Council working together to make a decision, and we want to make a recommendation. Cathy, can I ask you if you feel that the Planning Commission needs to look at the whole corridor. We do not need to talk about making a rule to accommodate them. Would it not be in our best interest and carry more weight if we had eight or nine members to make the recommendation? We need the others input, but for the purpose of making progress over the next thirty days would it be a good idea to forward to the City Council some type of official action of the Planning Commission? It would be to impress upon them, we feel the need to look at the entire corridor and a recommendation for signage along Interstate 10. We are going to begin work on it and once it is completed, we will forward it to the City Council for their consideration.

Ms. Jones: You will have to hold a public hearing too.

Vice Chairman: We are going to follow the process. We have gotten a lot of information. We are short of members so why not say next month we will do what we can. If there is discussion today that would move that forward, then that is fine. Maybe we would recommend we dissolve the other two overlays and create one overlay district. Maybe we would recommend creating another overlay or to take in portions of the proposed property into the existing overlay. There are so many ways we could go with it. Unless someone has a feel for which way we should go and what limitations we should have, then there is nothing we can do. I certainly don't. We can have a special meeting or discuss it at our next regularly scheduled work session and decide exactly what we want to do. Is there anybody that has a problem with that?

Ms. Barnette: I agree with what you said. We need to look at the entire interstate corridor regardless of Academy Sports and where it fits. This is a need, and I whole heartedly agree with that.

Vice Chairman: Exactly. In my mind, how do we convey that. I cannot take the comments or email of one individual and make much out if there is no telling what the other six people are feeling about this. I think the purpose would be to help guide the discussion.

Vice Chairman: I think we should send forward something tonight that says we are working on this. We are going to put together a recommendation that considers the entire interstate corridor with regard to signage.

Ms. Phelps: I agree with that.

Mayor Small: Again, this body and the City Council did a tremendous job with the district in which we thought there was going to be Academy Sports, and it did not happen. There again too, I think we should be able to complete this process within two meetings of the Planning Commission in order to forward it to the City Council.

Vice Chairman: We will say to the City Council, we will consider the entire corridor, north and south. We are considering including, but not limited to the option of and listing what the obvious options are. Taking all of the property on the Interstate 10 corridor and placing it in one overlay, leaving it like it is, or not doing anything at all. We could modify the Ordinance and not create an overlay and specify Interstate 10 as the kicker that would entitle you to have varying heights of signage. Let's go ahead and give it to them and say these are some of the ideas we are going to discuss. When we get it back maybe they, as a body, will say this is what we prefer or we like this concept the best. We can get back together knowing this is the way they are leaning toward. Maybe then we can be a little more efficient in trying to get something put together that they will ultimately approve.

Ms. Barnette: Maybe we can invite them to the work session?

Vice Chairman: They are not going to come.

Ms. Barnette: They have in the past when we have invited them.

Vice Chairman: If you feel like they will come, then ok.

Ms. Barnette: It is up to them whether or not they choose to come.

Vice Chairman: Adrienne, you are the pro at this. Other than a third overlay, divvying up the land and putting it in the two overlays or leaving it like it is and modifying the Ordinance, they still have two overlays and no man's land. No man's land gets to have developmental and pylon signs if you are on Interstate 10. What brought about the Jubilee Retail Overlay District is the property was located south of U.S. Highway 90, did not touch Interstate 10, and had special needs which did not allow us to do what we had done for the Eastern Shore Park District. We have basically put together two overlays of which one district fronts on Interstate 10, and other one does not. I think this map was very helpful to me to see the land left so you can see what the potential possibilities are. One section is still residential. I am leaning toward letting the overlay we have grow to the middle as to not reinvent the wheel.

Ms. Phelps: We have a forty-five foot height established in one overlay. If we raise that height all of those owners from Eastern Shore Park District will want to come back.

Vice Chairman: I do not think so.

Ms. Phelps: It is a possibility. As we go through this process, I think that is something we need to keep in the back of our minds. First, that is why we did forty-five feet in height in one of the overlays and forty in the other. Secondly, one of the fears of the community is we are going to end up with off-premise signs and billboards. I just want to lay that out there. That is not what we intend to do. Thirdly, whether or not you create an old "new" overlay or add language if they bring in more businesses, then I think we need to hear that now.

Mayor Small: I am not sure the number of businesses should be three.

Vice Chairman: Mr. Mayor, with all of the years I have worked with Planning and Zoning, the minute you do that you have the Ordinance driving the development. They will chop it up the way it will most benefit them. All of a sudden, you get away from encouraging the developer to do a good job.

Mayor Small: I think it needs to be according to acreage or things of that nature.

Vice Chairman: I do not agree that the owners in the Eastern Shore Park District which have a forty-five foot sign will say I want to be in the other district so my sign can be higher. There will be two motivating factors for considering different heights of signs. One is distance from the entrance, and the other is the elevation. In my mind, you will not owe them anything.

Mayor Small: If the benchmark is the road bed of Interstate 10, then that would cut out all of the bickering. I get tired of that too.

Vice Chairman: Cathy, what would you like to do? Would you like Adrienne to come to a City Council meeting to give a report or would you like to give a report? I think we need to tell the City Council we are working on it. I do not know what form you would like to do that in.

Mayor Small: I think you need to let them know we do not want to count them out, but they need to hear our dialogue too. We are not here to discuss a one hundred and twenty-foot tall sign above the road bed of Interstate 10.

Vice Chairman: Adrienne, you go to City Council meetings anyway so do you have a problem with saying we have discussed this tonight. We think everybody is in agreement to look at the entire corridor, and we see several options.

Ms. Barnette: We also could provide a copy to them.

Vice Chairman: We have information we are studying and looking at sight lines, elevations, and accesses. We are going to make a recommendation as quickly as possible.

Ms. Jones: I will include it in my Planning Commission report. Here is one thing no one has said out right, but it is the main reason you are looking at it.

Ms. Jones: There is a visual impairment from Interstate 10 for the properties which front on U.S. Highway 90. You are looking at the facts and all of the data behind it and trying to come up with a solution for the remaining land in the corridor. I do not know what the beginning point was for the Eastern Shore Park District, but they have several concessions the Jubilee Retail Overlay District does not have. They have one pylon sign which is one hundred and twenty feet tall with only two businesses on it. If you extended the district you would have to allow for another sign, and you do not know how high. You would be looking at the same thing you are looking at now. That is trying to overcome the impairment of the Interstate 10 roadway looking up toward the properties.

Vice Chairman: I would think whatever we do because of this strip of land between the right-of-way and the property is going to involve discussion with the Alabama Department of Transportation. As a Planning Commission, we need to ask someone from the Alabama Department of Transportation to tell us what can be done to the trees.

Mayor Small: Adrienne has that.

Ms. Jones: They have a permit for trimming trees and underbrush. It does not say cutting trees.

Mayor Small: They revised that when we did the Eastern Shore Park and Renaissance Subdivision.

Vice Chairman: I think the thinning they did down there softened the whole shopping complex, and I think it looks really nice. I think we will be looking for language from them that says in areas which are appropriate you are allowed to cut and thin trees to get the same look. In my mind, that is going to bring signs down.

Mayor Small: We have the permit.

Vice Chairman: It says no tree cutting.

Mayor Small: They will allow you to take out trees.

Ms. Jones: Does the City do the work?

Mayor Small: We have to do the work because we are the only ones insured and can do the work on the Alabama Department of Transportation right-of-way.

Vice Chairman: I think that is key to the discussion. We do not need to talk about line of sight if what is in the way is a tree they may need to remove or trim the underbrush. They have come to talk about medians, crossovers and stuff. Would they come to our work session so we can tell them what we are looking for? We would like to do some work inside of that boundary to make it more aesthetically conducive to commercial development. We do not need to do anything or make a motion. Adrienne is going to give a report to the City Council at the meeting of June 6, 2011.

Vice Chairman: We will have a meeting in June in which everyone will have had a chance to look at the material and maybe the City Council would have had a chance to give us some feedback. They can come to the work session if they want to, and then we will go from there.

Ms. Phelps: I would also like for us to consider monuments and getting away from lollipop signs.

Ms. Jones: Here is another thing you may want to consider. I did somewhat of a profile drawing along U.S. Highway 90. At some points, a pylon sign would be necessary, but at others a monument would work. That would be an option, but they would have to prove they would have to have a pylon sign rather than a monument.

Vice Chairman: We could probably take an average height from the bottom to the top from an elevation from U.S. Highway 90.

Mayor Small: Also, you could entice them by allowing the pylon sign to have a little more square footage if it were not as Victoria calls it a lollipop sign. I do not like that either. I would like for it to look like Eastern Shore Park and Renaissance Subdivision.

Ms. Phelps: Jubilee Retail Overlay District made one of the signs a monument with multiple tenants.

The next order of business is public participation.

PUBLIC PARTICIPATION:

Vice Chairman: Is there anyone who would like to address the Planning Commission?

Mr. Kevin Spriggs, business owner: I am a local business owner. I have been listening to the discussion, and I think the sign should be twenty feet taller. I know you do not necessarily agree with that. It is really hard to create an Ordinance. I think that government planning fails by trying to create one set of rules and try to apply it to something this complex. Especially if it applies to the economy in general. To me, I think the developer and the business men who are actually going to put up the money are much better suited for coming up with good ideals to attract business, customers to a site, and activity in general. The existing overlay districts originated from business people and developers. Some people say that AIG Baker, Inc. kind of messed up; however, somewhere down the line someone has paid the price for that too. I think for the purpose of creating the district you should focus on what Academy Sports is wanting to do and not go into a big discussion of what to do with the rest of the interstate corridor. Let the business people and the developers bring in the ideas and if you have a problem with it, then just reject that idea. Guidelines are ok, but do not create a set of rules for the whole corridor. Don't say this is it or we have come up with the latest and greatest plan, and we do not want to hear anything else. It will not stop people from wanting to come in here to create another overlay district with a new approach.

Mr. Spriggs: They are going to bring their ideas anyway. That is just the way people are. It is a very complex issue. It is very site specific and based on the geometry of the property. You need to send a message to Academy Sports to tell them what you want.

Vice Chairman: Is there anyone else who would like to address the Planning Commission? If not, public participation is closed.

The next order of business is the attorney's report.

ATTORNEY'S REPORT:

Mr. Bussey: No report.

The next order of business is commissioner's comments.

COMMISSIONER'S COMMENTS:

Vice Chairman: Do any of the Commissioners have any questions or comments?

Commissioners: No comment.

The next order of business is the director's comments.

DIRECTOR'S COMMENTS:

Ms. Jones: No comment.

ADJOURNMENT:

Vice Chairman: Do any of the Commissioners have any questions or comments? If there is no objection, the Chair will entertain a motion to adjourn.

There being no further business, the meeting was adjourned at 6:00 p.m.

Respectfully submitted by:

Jan Dickson, Planning Coordinator

APPROVED: June 23, 2011

Larry Chason, Vice Chairman

CITY OF DAPHNE
PLANNING COMMISSION AGENDA
REGULAR MEETING OF JUNE 23, 2011 REPORT
COUNCIL CHAMBERS, CITY HALL - 5:00 P.M.

---

1. **CALL TO ORDER** **DATE: JUNE 27, 2011**

2. **CALL OF ROLL** **ADJ/JD**

3. **APPROVAL OF MINUTES:**

Review of minutes for the regular meeting of May 26, 2011. **(APPROVED AS SUBMITTTED)**

4. **NEW BUSINESS:**

PETITIONS:

A. **ANNEXATION REVIEW:**

1. **Presentation to be given by Mr. Richard Davis or Meredith Turpin, David & Fields, P.C., representing Audubon Holdings, L.L.C., requesting annexation of a 19.08 acre parcel into the City of Daphne located southeast of the intersection of Pollard Road and County Road 64 with R-4, High Density Multi-Family Residential, zoning. The subject property is currently zoned RMF-6, Multiple Family District, Baldwin County District 15. Audubon Holdings, L.L.C, owner. (FAVORABLE RECOMMENDATION)**

2. **Presentation to be given by Mr. Richard Johnson, Public Works Director, requesting annexation of the right-of-way of Alabama State Highway 181 from Lawson Road to the south parcel line of Oldfield Subdivision into the corporate limits of the City of Daphne. (FAVORABLE RECOMMENDATION, CONDITIONED WITH THE CREATION OF A FUTURE LAND USE MAP FOR THE COMPREHENSIVE PLAN FOR THE SOUTHERN PORTION OF THE ALABAMA HIGHWAY 181 CORRIDOR UPON ACCEPTANCE OF THE RIGHT-OF-WAY BY THE CITY COUNCIL. THE MOTION CARRIED UNANIMOUSLY).**

B. **ADMINISTRATIVE PRESENTATION:**

Planning Commission discussion of options regarding the Interstate Sign Provisions of the Land Use and Development Ordinance. (DISCUSSION - NO ACTION TAKEN)

5. **PUBLIC PARTICIPATION**

6. **ATTORNEY'S REPORT**

7. **COMMISSIONER'S COMMENTS**

8. **DIRECTOR'S COMMENTS**

9. **ADJOURNMENT**

SET A PUBLIC HEARING DATE

AUGUST 1, 2011

TO CONSIDER:

1.)	Annexation:	Audubon Holding, LLC
	Property Located:	Southeast of the intersection of County Road 64 and Pollard Road
	Present Zoning:	RMF-6, Multiple Family District in Baldwin County District 15
	Requested Zoning:	R-4, High Density Multi-Family Residential District
	Recommendation:	Unanimous Favorable

2.)	Annexation:	Right-of-Way of AL State Highway181
	Property Located:	AL State Highway 181 from Lawson Road South to the Southernmost Corporate Limits of the City of Daphne
	Recommendation:	Unanimous Favorable

MEMORANDUM

To: Office of the City Clerk

From: Adrienne D. Jones,
Director of Community Development

Subject: Audubon Holding, L.L.C.
Annexation Review

Date: June 27, 2011

PRESENT ZONING: RMF-6, Multiple Family District, in Baldwin County District 15

PROPOSED ZONING: R-4, High Density Multi-Family Residential, City of Daphne

LOCATION: Southeast of the intersection of County Road 64 and Pollard Road

RECOMMENDATION: At the June 23, 2011, regular meeting of the City of Daphne Planning Commission, seven members were present. The motion carried unanimously for a ***favorable recommendation*** of the above-mentioned petition for annexation.

Attached please find said documentation and a copy of an ordinance from the office of the City Attorney for placement on the Tuesday, July 5, 2011 City Council agenda for action by the City Council.

Thank you,
ADJ/jd

cc: file

attachment(s)

1. Planning Report
2. Petition
3. Legal Description
4. Map of Property (Plat)
5. Ordinance

Planning Commission

ANNEXATION & ZONING REVIEW

AUDUBON PARK APARTMENTS ANNEXATION REVIEW

Owner: Audubon Holdings, LLC.

Contiguous to Daphne Corporate Limits: Yes, corporate lines adjoin the property to the east and west.

Existing Conditions: 262 unit apartment complex on 19.08 acres

Existing Zoning: RMF-6, Multiple Family District—Baldwin County District 15

See attached excerpt from Baldwin County Zoning Ordinance for RMF-6 district details.

Proposed Zoning: R-4, Multi-Family Residential district

See attached excerpt from Daphne Land Use & Development Ordinance for R-4 details.

Surrounding Zonings/Uses: District 15 Baldwin County

Northwest-(B-2) Local Business

Northeast-(RMF-6) Multi-family Baldwin County

South-(R-2B) Single family residential Baldwin County

East- (R-4) Multi-family townhomes-Jubilee Ridge

West-(R-4) Multi-family apartment district-Phase 2 Audubon Park

Existing Utility Service Providers:

Sewer and Gas Daphne Utilities

Electric—Riviera Utilities

Affected City Service Providers:

Fire Protection—Station 2 (North Main Street)

Police Protection—Police Beat 1

Public Works

Baldwin County Schools—School district zones are not set by municipal boundaries, therefore school districting will not be affected by annexation.

Comprehensive Plan

The Comprehensive Plan designates this area as a residential use.
Therefore, the requested R-4 zoning is consistent with the Future Land Use Designation.

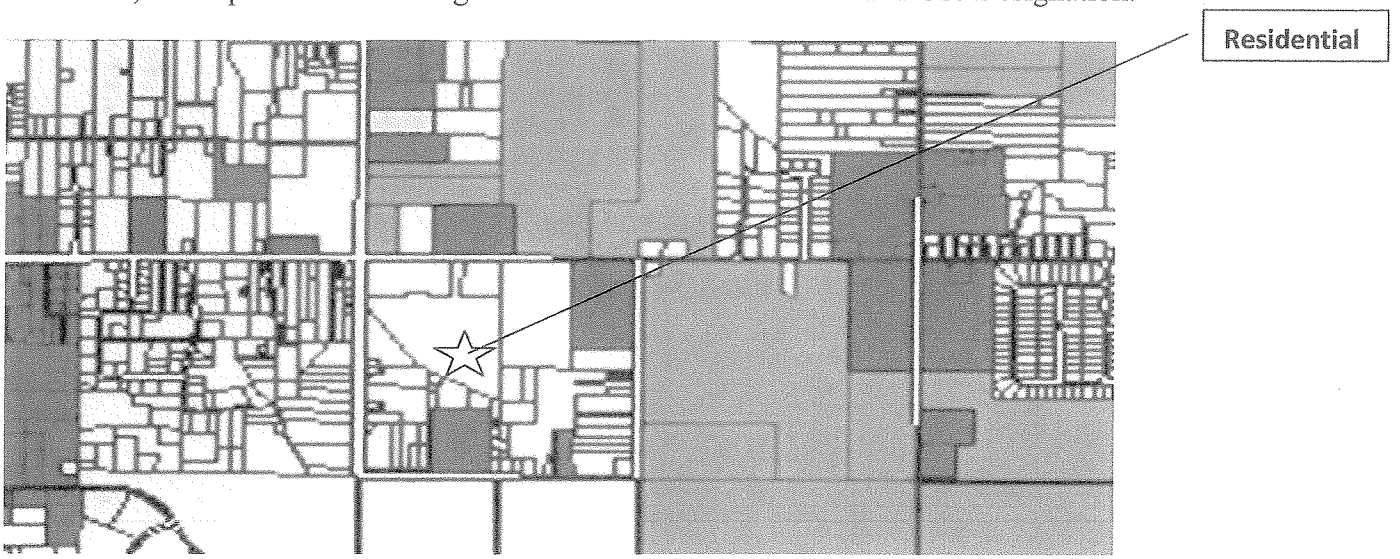

Future Land Use Map

Community Development

The well-established Audubon Park Apartment complex is located along County Road 64 between Pollard Road (west) and Friendship Road (east). The property is currently in Baldwin County, zoned RMF-6, Multiple Family District—Baldwin County District 15. The petitioner proposes to annex into the City of Daphne as R-4 which is the only district where such use is allowed. R-4 zoning would be appropriate here as the surrounding properties are also zoned R-4. **Recommend approval.**

Density Comparison

Audubon Park, Phase1	Approximate Density
Density at time of development (was 26.3 acre site)—no county zoning or density requirements were in place when originally constructed	9.96 units/acre
Current Density (now 19.08 acres-result of subdivision of property)	13.7 units/acre
Current Max Density RMF-6	6 units/acre
Current Max Density R-4	14 units/acre

STATE OF ALABAMA

COUNTY OF BALDWIN

PETITION FOR ANNEXATION OF CERTAIN PROPERTY INTO THE CORPORATE LIMITS OF THE MUNICIPALITY OF THE CITY OF DAPHNE, ALABAMA

(~~Audubon Park Apartments, Phase~~ One)

The undersigned, Audubon Holdings, L.L.C., files this petition with the Clerk of the City of Daphne requesting the property hereafter described commonly referred to as 19.08 acres adjacent to County Rd.64 to be annexed into the City of Daphne, a municipal corporation incorporated under the laws of the State of Alabama, and submits the following in support of its petition:

1. **Description Of Property**: The description of the property which Petitioner requests to be annexed into the City of Daphne is described in Exhibit "A" attached hereto and made a part of this Petition as if fully set out herein (the "Property").

2. **Map Of Property**: Attached hereto as Exhibit "B" and made a part of this Petition, is a map of the Property showing its relationship to the corporate limits of the municipality of the City of Daphne.

3. **Owner**: The Petitioner, Audubon Holdings, L.L.C., is the owner of the Property hereby sought to be annexed into the corporate limits of the City of Daphne.

4. **Specific Conditions**: This Petition is conditioned upon the adoption of an ordinance, which shall include specifically the conditions requested below upon annexing the said Property into the corporate limits of the City of Daphne. Please state the requested zoning, if other that R-1, or any other conditions which may apply upon annexation:

ZONE: R-4, High Density Multi-Family Residential

5. Code: This Petition is filed pursuant to the provisions of Article 21, Chapter 42, Title 11, Code of Alabama, 1975, as amended.

DATED this 19th day of May, 2011.

Respectfully submitted,

Audubon Holdings, L.L.C.
Name of Corporation

By: John D. Blanchard

Its: Authorized Signatory

STATE OF ALABAMA
COUNTY OF BALDWIN

I, the undersigned Notary Public in and for said State and County, hereby certify that John D. Blanchard whose name as Authorized Signatory of Audubon Holdings, L.L.C., an Alabama corporation, is signed to the foregoing instrument, and who is known to me, acknowledged before me on this day that, being informed of the contents of the instrument, he as such officer and with full authority, executed the same voluntarily on the day same bears date.

GIVEN under my hand and official seal on this the 19th day of May, 2011.

Michelle McPowell (NOTARY SEAL)
NOTARY PUBLIC
My commission expires: 8/29/2012

AUDUBON PARK APARTMENTS,
PHASE ONE

SOUTHEAST OF THE INTERSECTION OF POLLARD ROAD AND COUNTY ROAD 64

ANNEXATION REVIEW

EXHIBIT "A"

LEGAL DESCRIPTION:

LOT 2, FINAL PLAT (REVISED), AUDUBON PARK SUBDIVISION, RESUBDIVISION OF LOT 2, AS PER PLAT RECORDED ON SLIDE NO. 2364-F OF THE PROBATE COURT RECORDS OF BALDWIN COUNTY, ALABAMA.

AUDUBON HOLDINGS, LLC
ANNEXATION
EXHIBIT B

2364 F

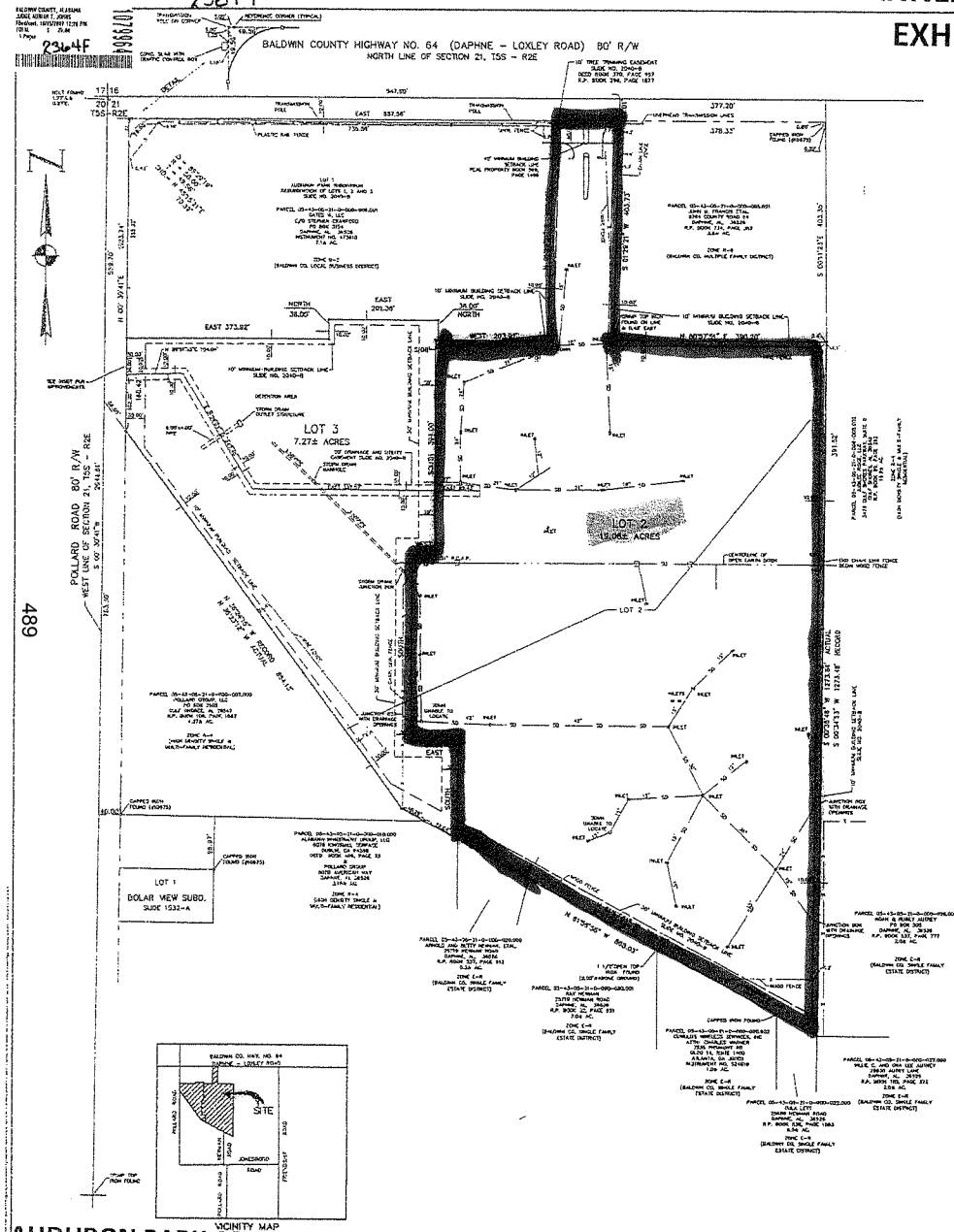

I, CERTIFY THAT I HAVE CONSULTED THE NATIONAL FLOOD INSURANCE PROGRAM FLOOD INSURANCE RATE MAP, COMMUNITY PANEL NO. 015000 0307 K (MAP NO. 01005C0307 K), DATED JUNE 17, 2002 AND FOUND THAT THE ABOVE DESCRIBED PROPERTY IS LOCATED IN A ZONE "X (UNSHADED)" AREA.

DONALD F. COLEMAN – AL REG. NO. 5421

CERTIFICATION OF APPROVAL OF UTILITIES

STATE OF ALABAMA)
CITY OF DAPHNE)
COUNTY OF BALDWIN)

I, ROB MCCLURY, GENERAL MANAGER FOR THE UTILITIES BOARD OF THE CITY OF DAPHNE, ALABAMA, DO HEREBY CERTIFY THAT THE ATTACHED FINAL PLAT HAS BEEN EXAMINED BY ME AND ALSO THAT THE SUBDIVIDER'S PLANS AND SPECIFICATIONS APPEAR TO COMPLY WITH THE MINIMUM REQUIREMENTS OF THE UTILITIES BOARD.

DATED THIS 1st DAY OF OCTOBER, 2007.

ROB MCCLURY GENERAL MANAGER OR AUTHORIZED REPRESENTATIVE

CERTIFICATION OF APPROVAL FOR RECORDING

I, HEREBY CERTIFY THAT THE SUBDIVISION PLAT SHOWN HEREON HAS BEEN FOUND TO COMPLY WITH THE DAPHNE LAND USE AND DEVELOPMENT ORDINANCE WITH THE EXCEPTION OF SUCH VARIANCES, IF ANY, AS ARE NOTED IN THE MINUTES OF THE PLANNING COMMISSION AND WRITTEN UPON SAID PLAT AND THAT IT HAS BEEN APPROVED FOR RECORDING IN THE OFFICE OF THE BALDWIN COUNTY JUDGE OF PROBATE.

DATED THIS THE 29th DAY OF September, 2007.

PLANNING COMMISSION CHAIRMAN, OR ITS AUTHORIZED REPRESENTATIVE

PUBLIC WORKS DIRECTOR'S APPROVAL OR ITS AUTHORIZED REPRESENTATIVE

I, MELVIN MCCARLEY, PUBLIC WORKS DIRECTOR FOR THE CITY OF DAPHNE, ALABAMA, DO HEREBY CERTIFY THAT THE STREETS, DRAINAGE, AND OTHER IMPROVEMENTS HAVE BEEN INSTALLED IN ACCORDANCE WITH THE SUBDIVIDER'S PLANS AND SPECIFICATIONS AND COMPLY WITH THE REQUIREMENTS SET FORTH IN THE DAPHNE LAND USE AND DEVELOPMENT ORDINANCE.

DATED THIS THE 25th DAY OF October, 2007.

MELVIN MCCARLEY, PUBLIC WORKS DIRECTOR FOR THE CITY OF DAPHNE, ALABAMA

CITY OF DAPHNE
DIRECTOR OF COMMUNITY DEVELOPMENT

I, WILLIAM H. EADY, SR., DIRECTOR OF COMMUNITY DEVELOPMENT FOR THE CITY OF DAPHNE, ALABAMA, DO HEREBY CERTIFY THAT THE FINAL PLAT HAS BEEN EXAMINED BY ME AND THE SUBDIVIDER'S PLANS AND SPECIFICATIONS COMPLY WITH THE REQUIREMENTS SET FORTH IN THE DAPHNE LAND USE AND DEVELOPMENT ORDINANCE.

DATED THIS 27th DAY OF Sept, 2007.

WILLIAM H. EADY, SR., DIRECTOR OF COMMUNITY DEVELOPMENT

NOTES:
1) LOT 3 HAS BEEN ANNEXED INTO THE CITY OF DAPHNE AND IS CURRENTLY ZONED R-4. LOT 2 IS ZONED R-6 WITH BALDWIN COUNTY.
2) RESTER AND COLEMAN CAPPED 5/8" REBAR FOUND AT CORNERS UNLESS OTHERWISE NOTED.
3) MINIMUM BUILDING SETBACKS SHOWN ON PLAT.
4) THE DETENTION POND ON LOTS 1 AND 2 PROVIDES STORM WATER DETENTION FOR LOTS 1, 2, AND 3 OF AUDUBON PARK SUBDIVISION, RESUBDIVISION OF LOT 2. IF THERE IS ANY CONSTRUCTION ON ANY OF THOSE LOTS THAT REQUIRES STORM DRAIN LINES AND/OR THE DETENTION POND TO BE MOVED, IT WILL BE THE RESPONSIBILITY AND EXPENSE OF THE OWNER OF THE LOT TO DO SO. THIS NOTE IS PUT ON THE PLAT IN LIEU OF RECORDING A PERMANENTLY LOCATED EASEMENT.
5) REVISED SEPTEMBER 19, 2007 – 30' MINIMUM REAR BUILDING SETBACK LINE ADDED TO THE REAR OF LOT 3.

DESCRIPTION:

LOT 2, AUDUBON PARK SUBDIVISION, RESUBDIVISION OF LOTS 1, 2 AND 3, AS PER PLAT RECORDED ON SLIDE 2040-B OF THE PROBATE COURT RECORDS OF BALDWIN COUNTY, ALABAMA. CONTAINING 20.3492 ACRES.

CERTIFICATION BY SURVEYOR

STATE OF ALABAMA
CITY OF DAPHNE
COUNTY OF BALDWIN

THIS IS TO CERTIFY THAT I, DONALD F. COLEMAN, A REGISTERED LAND SURVEYOR, HAVE SURVEYED AND SUBDIVIDED THE PROPERTY SHOWN ON WITH LEGAL DESCRIPTION HEREON, WHICH IS A CORRECT REPRESENTATION OF SAID SURVEY AND SUBDIVISION. ALL DISTANCES, BEARINGS, ANGLES, RADII, CURVES, AND OTHER DIMENSIONS THEREOF ARE TRUE AND CORRECT TO THE ACCURACY REQUIRED BY THE DAPHNE PLANNING COMMISSION, AND THAT ALL PARTS OF THIS SURVEY AND DRAWING HAVE BEEN COMPLETED IN ACCORDANCE WITH THE REQUIREMENTS OF THE MINIMUM TECHNICAL STANDARDS FOR THE PRACTICE OF LAND SURVEYING IN THE STATE OF ALABAMA, AND THAT PERMANENT MONUMENTS HAVE BEEN PLACED AT POINTS MARKED THUS [ ] AS SHOWN HEREON. I FURTHER CERTIFY THAT ALL REGULATIONS ENACTED BY THE DAPHNE PLANNING COMMISSION RELATIVE TO PLATS AND SUBDIVISIONS HAVE BEEN COMPLIED WITH IN THE PREPARATION OF THIS PLAT.

GIVEN UNDER MY HAND AND SEAL AT MOBILE, ALABAMA, THIS THE 4th DAY OF SEPTEMBER, 2007.

DONALD F. COLEMAN – AL REG. NO. 5421 DATE

CERTIFICATE OF OWNERSHIP AND DEDICATION

THIS IS TO CERTIFY THAT I, THE UNDERSIGNED, AM THE MANAGING MEMBER OF GATES 16, L.L.C., AN ALABAMA LIMITED LIABILITY COMPANY, OWNER OF THE LAND SHOWN AND DESCRIBED IN THE PLAT, AND THAT I HAVE CAUSED THE SAME TO BE SURVEYED AND SUBDIVIDED AS INDICATED HEREON, FOR THE USES AND PURPOSES HEREIN SET FORTH AND DO HEREBY ACKNOWLEDGE AND ADOPT THE SAME UNDER THE DESIGN AND TITLE HEREON INDICATED, AND GRANT ALL EASEMENTS AND DEDICATE ALL STREETS AND ALLEYS TO PUBLIC OR PRIVATE USE AS NOTED, TOGETHER WITH SUCH RESTRICTIONS AND COVENANTS NOTED BELOW OR ATTACHED IN A SEPARATE LEGAL DOCUMENT.

DATED THIS THE 4th DAY OF October, 2007.

STEPHEN C. CRAWFORD – AS MEMBER
GATES 16, L.L.C.

NOTARY PUBLIC

STATE OF ALABAMA
COUNTY OF BALDWIN

I, KATHLEEN MAY GRIFFIN, A NOTARY PUBLIC, IN AND FOR THE COUNTY OF BALDWIN, IN THE STATE OF ALABAMA, DO CERTIFY THAT STEPHEN C. CRAWFORD, WHOSE NAME AS MEMBER OF GATES 16, L.L.C., AN ALABAMA LIMITED LIABILITY COMPANY, IS SUBSCRIBED TO THE CERTIFICATE OF OWNERSHIP AND DEDICATION, APPEARED BEFORE ME ON THIS DAY IN PERSON AND ACKNOWLEDGED THAT HE SIGNED, SEALED AND DELIVERED SAID INSTRUMENT BY HIS FREE AND VOLUNTARY ACT FOR THE USES AND PURPOSES HEREIN SET FORTH.

GIVEN UNDER MY HAND AND NOTARIAL SEAL THIS THE 4th DAY OF OCTOBER, 2007.

NOTARY PUBLIC

CERTIFICATE OF OWNERSHIP AND DEDICATION

THIS IS TO CERTIFY THAT WE, AUDUBON PARK APARTMENTS, L.L.C., AN ALABAMA LIMITED LIABILITY COMPANY, AUDUBON PARK APARTMENTS–MI, L.L.C., JW–INVESTMENTS–AUDUBON, L.L.C., JMH–INVESTMENTS–AUDUBON, L.L.C., RM–INVESTMENTS–AUDUBON, L.L.C., MADISON–CLINTON–AUDUBON, L.L.C., AND MILLER INVESTMENT PROPERTIES–AUDUBON, L.L.C., ALL OF WHOM ARE DELAWARE LIMITED LIABILITY COMPANIES, ARE THE OWNERS OF THE LAND SHOWN AND DESCRIBED IN THE PLAT, AND THAT WE HAVE CAUSED THE SAME TO BE SURVEYED AND SUBDIVIDED AS INDICATED HEREON, FOR THE USES AND PURPOSES HEREIN SET FORTH AND DO HEREBY ACKNOWLEDGE AND ADOPT THE SAME UNDER THE DESIGN AND TITLE HEREON INDICATED, AND GRANT ALL EASEMENTS AND DEDICATE ALL STREETS AND ALLEYS TO PUBLIC OR PRIVATE USE AS NOTED, TOGETHER WITH SUCH RESTRICTIONS AND COVENANTS NOTED BELOW OR ATTACHED IN A SEPARATE LEGAL ACCOUNT.

DATED THIS THE 10th DAY OF October, 2007.

JOHN B. BLANCHARD – AS CO-MANAGER
AUDUBON PARK APARTMENTS, L.L.C.

JOHN BLANCHARD – AS CO-MANAGER
AUDUBON PARK APARTMENTS–MI, L.L.C.

JAY L. WOLF, JR. – AS CO-MANAGER
JW–INVESTMENTS–AUDUBON, L.L.C.

JAY L. WOLF, JR. – AS CO-MANAGER
JMH–INVESTMENTS–AUDUBON, L.L.C.

JAY L. WOLF, JR. – AS CO-MANAGER
JMH–INVESTMENTS–AUDUBON, L.L.C.

JAY L. WOLF, JR. – AS CO-MANAGER
RM–INVESTMENTS–AUDUBON, L.L.C.

RICHARD F. MADISON, JR. – AS MANAGER
MADISON–CLINTON–AUDUBON, L.L.C.

SAMUEL L. MILLER – AS MANAGER
MILLER INVESTMENT PROPERTIES – AUDUBON, L.L.C.

CERTIFICATE BY NOTARY PUBLIC

STATE OF ALABAMA
COUNTY OF BALDWIN

I, Larry L. Long, A NOTARY PUBLIC, IN AND FOR THE COUNTY OF BALDWIN, IN THE STATE OF ALABAMA, DO CERTIFY THAT JOHN BLANCHARD, WHOSE NAME AS CO-MANAGER OF AUDUBON PARK APARTMENTS, L.L.C. AND AS CO-MANAGER OF AUDUBON PARK APARTMENTS–MI, L.L.C., JAY L. WOLF, JR., WHOSE NAME AS CO-MANAGER OF JW–INVESTMENTS–AUDUBON, L.L.C., AS CO-MANAGER OF JMH–INVESTMENTS–AUDUBON, L.L.C., AS CO-MANAGER OF JMH–INVESTMENTS–AUDUBON, L.L.C., AND AS CO-MANAGER OF RM–INVESTMENTS–AUDUBON, L.L.C., RICHARD F. MADISON JR., WHOSE NAME AS MANAGER OF MADISON–CLINTON–AUDUBON, L.L.C., AND SAMUEL L. MILLER, WHOSE NAME AS MANAGER OF MILLER INVESTMENT PROPERTIES–AUDUBON, L.L.C., ARE SUBSCRIBED TO THE CERTIFICATE OF OWNERSHIP AND DEDICATION, APPEARED BEFORE ME ON THIS DAY IN PERSON AND ACKNOWLEDGED THAT THEY SIGNED, SEALED AND DELIVERED SAID INSTRUMENT BY THEIR FREE AND VOLUNTARY ACT FOR THE USES AND PURPOSES HEREIN SET FORTH.

GIVEN UNDER MY HAND AND NOTARIAL SEAL THE 10th DAY OF October, 2007.

NOTARY PUBLIC

CERTIFICATE OF APPROVAL BY RIVERA UTILITIES

THE UNDERSIGNED, AS AUTHORIZED BY RIVERA UTILITIES HEREBY APPROVES THE WITHIN PLAT FOR THE RECORDING OF SAME IN THE PROBATE OFFICE OF BALDWIN COUNTY, ALABAMA, THIS 27th DAY OF Sept, 2007.

RIVERA UTILITIES AUTHORIZED SIGNATURE

CERTIFICATE OF APPROVAL BY AT&T

THE UNDERSIGNED, AS AUTHORIZED BY AT&T HEREBY APPROVES THE WITHIN PLAT FOR THE RECORDING OF SAME IN THE PROBATE OFFICE OF BALDWIN COUNTY, ALABAMA, THIS 27th DAY OF Sept, 2007.

AT&T AUTHORIZED SIGNATURE

100' 0 100' 200'
GRAPHIC SCALE

FINAL PLAT (REVISED)
AUDUBON PARK SUBDIVISION
RESUBDIVISION OF LOT 2

RESTER AND COLEMAN
ENGINEERS, INC.
56 MIDTOWN PARK WEST MOBILE, ALABAMA 36606-4148
TELEPHONE NO. (334)-479-4518
FAX NO. (334)-479-4522

DWG. BY:	DATE	REVISIONS						SCALE:
H.F.S.	10/16/97	BY:	DATE	BY:	DATE	BY:	DATE	1"=100'
CHKD. BY:	DATE	H.F.S.	09/11/07	H.F.S.	09/19/07			FILE NO.
D.F.C.	08/24/07	H.F.S.	09/24/07					S-76

AUDUBON PARK ~~APARTMENTS~~, PHASE ONE

EXHIBIT "B"

CITY OF DAPHNE, ALABAMA
ORDINANCE 2011-____

AN ORDINANCE TO ANNEX AUDUBON PARK APARTMENTS, PHASE ONE, INTO THE CORPORATE LIMITS OF THE CITY OF DAPHNE

WHEREAS, the owners of the property described in Section I of this Ordinance have signed and filed a written petition with the City Clerk of the City of Daphne, Alabama, requesting that such property be annexed to the corporate limits of the City of Daphne, Alabama; and,

WHEREAS, all of such property is located and contained within an area contiguous to the corporate limits of the City of Daphne, Alabama and does not lie within the corporate limits or police jurisdiction of any other municipality; and,

WHEREAS, said petition contains an accurate description of the property or territory proposed to be annexed together with a map of said property showing its relationship to the corporate limits of the City of Daphne; and,

WHEREAS, the Planning Commission of the City of Daphne, Alabama, at its regularly scheduled meeting of June 23, 2011, forwarded a unanimous favorable recommendation to the City Council of the City of Daphne, Alabama for annexation of the areas shown in Exhibit "A" with said property being zoned as a R-4, High Density Multi-Family Residential, District; and,

WHEREAS, after proper publication, a public hearing was held by the City Council on August 1, 2011, concerning the petition for annexation; and,

WHEREAS, the City Council of the City of Daphne determined it is in the public interest that said real property be annexed into the City of Daphne, Alabama and that all legal requirements for annexing said real property have been met pursuant to Sections 11-42-20 through 11-42-24, Code of Alabama (1975).

NOW THEREFORE, BE IT ORDAINED BY THE CITY COUNCIL OF THE CITY OF DAPHNE, ALABAMA, AS FOLLOWS:

SECTION I: ANNEXATION

The boundary lines of the City of Daphne, Alabama, be, and the same are hereby altered or rearranged as to include all of the territory heretofore encompassed by the corporate limits of the City of Daphne, Alabama and in addition thereto the following described territory, to-wit:

Name: Audubon Park Apartments, Phase One

Legal Description: LOT 2, FINAL PLAT (REVISED), AUDUBON PARK SUBDIVISION, RESUBDIVISION OF LOT 2, AS PER PLAT RECORDED ON SLIDE NO. 2364-F OF THE PROBATE COURT RECORDS OF BALDWIN COUNTY, ALABAMA.

SECTION II: PUBLICATION

This ordinance shall be published as provided by law, and a certified copy of the same shall be filed with the Probate Court of Baldwin County, Alabama.

SECTION III: SEVERABILITY

The provisions of this Ordinance are severable. If any section, subsection, sentence, clause, phrase, or portion of this Ordinance is for any reason held invalid or unconstitutional by any court of competent jurisdiction, such portion shall be deemed a separate, distinct, and independent provision and such holding shall not affect the validity of the remaining portions thereof.

SECTION IV: EFFECTIVE DATE

This Ordinance shall become effective immediately and be in full force after final passage and publication as required by law.

APPROVED AND ADOPTED BY THE CITY COUNCIL OF THE CITY OF DAPHNE, ALABAMA ON THIS THE ____ DAY OF _____, 2011.

_____
CATHY S. BARNETTE,
COUNCIL PRESIDENT

_____
FRED SMALL,
MAYOR

ATTEST:

_____
DAVID COHEN
CITY CLERK, MMC

PLEASE Publish in the Bulletin Legal Section on **Friday, July 8, 2011**

FIRST NOTICE OF PUBLIC HEARING

Notice is hereby given the first time that the City Council of the City of Daphne will hold a Public Hearing on August 1, 2011 at 6:30 pm in the Council Chambers at City Hall, 1705 Main Street, Daphne, Alabama. The public is welcome to attend and offer comments opposing or favoring a proposed Ordinance annexing certain property as presented below. Any person with an American's with Disabilities Act disability must contact the City Clerk's office ten days prior to the Public Hearing, in order for accommodations to be made.

David L. Cohen, City Clerk, MMC

PROPOSED ORDINANCE:

CITY OF DAPHNE, ALABAMA
ORDINANCE 2011-

AN ORDINANCE TO ANNEX AUDUBON PARK APARTMENTS, PHASE ONE, INTO THE CORPORATE LIMITS OF THE CITY OF DAPHNE

WHEREAS, the owners of the property described in Section I of this Ordinance have signed and filed a written petition with the City Clerk of the City of Daphne, Alabama, requesting that such property be annexed to the corporate limits of the City of Daphne, Alabama; and,

WHEREAS, all of such property is located and contained within an area contiguous to the corporate limits of the City of Daphne, Alabama and does not lie within the corporate limits or police jurisdiction of any other municipality; and,

WHEREAS, said petition contains an accurate description of the property or territory proposed to be annexed together with a map of said property showing its relationship to the corporate limits of the City of Daphne; and,

WHEREAS, the Planning Commission of the City of Daphne, Alabama, at its regularly scheduled meeting of June 23, 2011, forwarded a favorable recommendation to the City Council of the City of Daphne, Alabama for annexation of the areas shown in Exhibit "A" with said property being zoned as a R-4, High Density Multi-Family Residential, District; and,

WHEREAS, after proper publication, a public hearing was held by the City Council on August 1, 2011, concerning the petition for annexation; and,

WHEREAS, the City Council of the City of Daphne determined it is in the public

PLEASE Publish in the Bulletin Legal Section on **Friday, July 15, 2011**

SECOND NOTICE OF PUBLIC HEARING

Notice is hereby given the second time, the first notice was published on July 8, 2011, that the City Council of the City of Daphne will hold a Public Hearing on August 1, 2011 at 6:30 pm in the Council Chambers at City Hall, 1705 Main Street, Daphne, Alabama. The public is welcome to attend and offer comments opposing or favoring a proposed Ordinance annexing certain property as presented below. Any person with an American's with Disabilities Act disability must contact the City Clerk's office ten days prior to the Public Hearing, in order for accommodations to be made.

David L. Cohen, City Clerk, MMC

PROPOSED ORDINANCE:

CITY OF DAPHNE, ALABAMA
ORDINANCE 2011-

AN ORDINANCE TO ANNEX AUDUBON PARK APARTMENTS, PHASE ONE, INTO THE CORPORATE LIMITS OF THE CITY OF DAPHNE

WHEREAS, the owners of the property described in Section I of this Ordinance have signed and filed a written petition with the City Clerk of the City of Daphne, Alabama, requesting that such property be annexed to the corporate limits of the City of Daphne, Alabama; and,

WHEREAS, all of such property is located and contained within an area contiguous to the corporate limits of the City of Daphne, Alabama and does not lie within the corporate limits or police jurisdiction of any other municipality; and,

WHEREAS, said petition contains an accurate description of the property or territory proposed to be annexed together with a map of said property showing its relationship to the corporate limits of the City of Daphne; and,

WHEREAS, the Planning Commission of the City of Daphne, Alabama, at its regularly scheduled meeting of June 23, 2011, forwarded a favorable recommendation to the City Council of the City of Daphne, Alabama for annexation of the areas shown in Exhibit "A" with said property being zoned as a R-4, High Density Multi-Family Residential, District; and,

WHEREAS, after proper publication, a public hearing was held by the City Council on August 1, 2011, concerning the petition for annexation; and,

/ END OF SYNOPSIS

MEMORANDUM

To: Office of the City Clerk

From: Adrienne D. Jones,
Director of Community Development

Subject: The Right-of-Way of Alabama State Highway 181 from Lawson Road South to the Southernmost Corporate Limits of the City of Daphne

Annexation Review

Date: June 27, 2011

LOCATION: The right-of way of Alabama State Highway 181 from Lawson Road South to the Southernmost corporate limits of the City of Daphne

RECOMMENDATION: At the June 23, 2011, regular meeting of the City of Daphne Planning Commission, seven members were present. The motion carried unanimously for a ***favorable recommendation*** of the above-mentioned annexation.

Attached please find said documentation and a copy of an ordinance from the office of the City Attorney for placement on the Tuesday, July 5, 2011 City Council agenda for action by the City Council.

Thank you,
ADJ/jd

cc: file

attachment(s)

1. Planning Report
2. Internal Memorandum - Mayor Small
3. Correspondence to ALDOT
4. Correspondence from ALDOT
5. Map of Right-of-Way
6. Legal Description
7. Ordinance

Planning Commission

COMMUNITY DEVELOPMENT

Daphne

ALABAMA

The Jubilee City

ANNEXATION REVIEW

STATE ROAD 181 A.K.A HIGHWAY 181 ANNEXATION REVIEW

Owner: State of Alabama

Contiguous to Daphne Corporate Limits: Yes, corporate lines adjoin the property to the north and south

Existing Conditions: approximately 5.56 miles of existing right-of-way

Existing Zoning: N/A **Proposed Zoning:** N/A **Baldwin County Schools**—N/A

Surrounding Zonings/Uses: District 15 Baldwin County N/A

Affected Utility Service Providers: N/A

Affected City Service Providers:
Fire Protection—Stations 3 & 4
Police Protection—Police Beat – 1 & 3

Comprehensive Plan

The Proposed Roadway Functional Classifications Map of the Comprehensive Plan *(see attached)* designates this roadway as a minor arterial, similar to Highway 90, County Road 13, County Road 64, Johnson Road, and Main Street. Once the Planning Commission reviews and updates the Comprehensive Plan, State Road 181 should be designated as a future "Major Arterial."

Community Development

With Ordinance 2010-01, the City Council approved the annexation of the northern end of Highway 181 and parts of Highway 90. At that time, the City of Daphne proposed to expand its police and fire protection coverage by annexing the right-of-way(s) of U.S. Highway 90 (from County Road 13 eastward to the Daphne Corporate limits) and Alabama Highway 181 (just north of the interchange of I-10 southward to Lawson Road). At that time, Baldwin County Sheriff's Department serviced the area; however, the Police Chief indicated that it would be in the interest of public safety to provide for police and fire protection in this area, thereby closing the gap of protection in this section of the City.

The current issue came from the Public Works Committee as a result of a discussion regarding a Highway 181 Maintenance Agreement between the City and the State. *Please see attached Public Works Committee Meeting minutes (March 21, 2011 and May 25, 2011). Included herein, please see ROW annexation request letter from Mayor to Division Engineer and response letter indicating "no objection."*

Recommend Approval.

Daphne
ALABAMA
The Jubilee City

INTERNAL MEMORANDUM

TO: Adrienne Jones, Community Development Director

CC: Richard Johnson, Public Works Director

FROM: Mayor Fred Small

DATE: June 2, 2011

SUBJECT: Right-of-Way Annexation – State Route 181

Please find attached a letter from ALDOT stating they have no objections to the City of Daphne annexing the rights-of-way of State Route 181 from US Highway 90 south to the southern city limits as shown on the map.

By way of this memo I am asking that you move forward with this annexation process.

Thank you.

RECEIVED 6-2-11

FRED SMALL
MAYOR

DAVID L. COHEN, MMC
CITY CLERK

KIMBERLY M. BRILEY
FINANCE DIRECTOR/TREASURER

DAVID CARPENTER II
CHIEF OF POLICE

JAMES "BO" WHITE
FIRE CHIEF

COUNCIL MEMBERS
BAILEY YELDING, JR.
DISTRICT 1
CATHY BARNETTE
DISTRICT 2
JOHN L. LAKE
DISTRICT 3
KELLY D. REESE
DISTRICT 4
RON SCOTT
DISTRICT 5
DEREK BOULWARE
DISTRICT 6
AUGUST A. BALLIMDO
DISTRICT 7

SECTION	INFO	ACTION	FILE
DIV ENGINEER	✓		
ADMINISTRATION			
CONSTRUCTION			
COUNTY TRANS			
DISTRICT ENGRS			
EQUIPMENT			
MAINTENANCE		✓	✓
MATERIALS			
PLANNING			
SPECIAL PROJ			

April 7, 2011

Mr. Vince Calametti, P.E., Division Engineer
ALDOT - Ninth Division
1701 North Beltline Hwy.
Mobile, AL 36618

Re: City of Daphne – ROW Annexation Request - State Route 181

Dear Mr. Calametti:

I am respectfully writing to ask for the consent of the Alabama Department of Transportation (ALDOT) for the annexation of the Rights-of-Way of State Highway 181 from U.S. Highway 90 south to the City of Daphne's southern city limits. The extents of this annexation request are described in the attached Legal Description and map.

This request is precipitated by the current action of the City to enter into a Cooperative Maintenance Agreement for the same described State Right-of-Way. To expedite this process please forward this request to your Chief Legal Counsel for simultaneous review and possible approval.

Upon consent, City Staff will present the annexation to all applicable Commissions and the full City Council for approval. If you have any questions or need additional information you can contact Richard Johnson, Public Works Director at (251) 621-3182.

ALDOT and the Ninth Division has been a stalwart supporter of the City in such past endeavors and I thank you in advance for your continuing support of the City of Daphne.

Sincerely,

Fred Small
Mayor

Attachments: Legal Description
Annexation Map

Cc: Richard D. Johnson, PE; Public Works Director
Adrienne Jones; Director, Community Development
File

RECEIVED
APR 12 2011
ALDOT Ninth Division
Division Engineer

1705 MAIN STREET • P.O. BOX 400 • DAPHNE, ALABAMA 36526 • (251) 621-9000 • FAX: (251) 621-8624

ALABAMA DEPARTMENT OF TRANSPORTATION

NINTH DIVISION
OFFICE OF DIVISION ENGINEER
1701 I-65 WEST SERVICE ROAD N
MOBILE, ALABAMA 36618-1109
TELEPHONE: (251) 470-8200
FAX: (251) 473-3624

Robert Bentley
Governor

John R. Cooper
Transportation Director

May 25, 2011

Mayor Fred Small
City of Daphne
1705 Main Street
P. O. Box 400
Daphne, Alabama 36526

Dear Mayor Small:

Re: Right-of-Way Annexation Request
State Route 181
City of Daphne

The Ninth Division has no objections to the City of Daphne annexing the rights-of-way of State Route 181 from US Highway 90 south to the southern city limits as shown on the attached map.

If any additional information is needed, please advise.

Sincerely,

Vincent E. Calametti, P.E.
Division Engineer

VEC/LR/bja
c: File

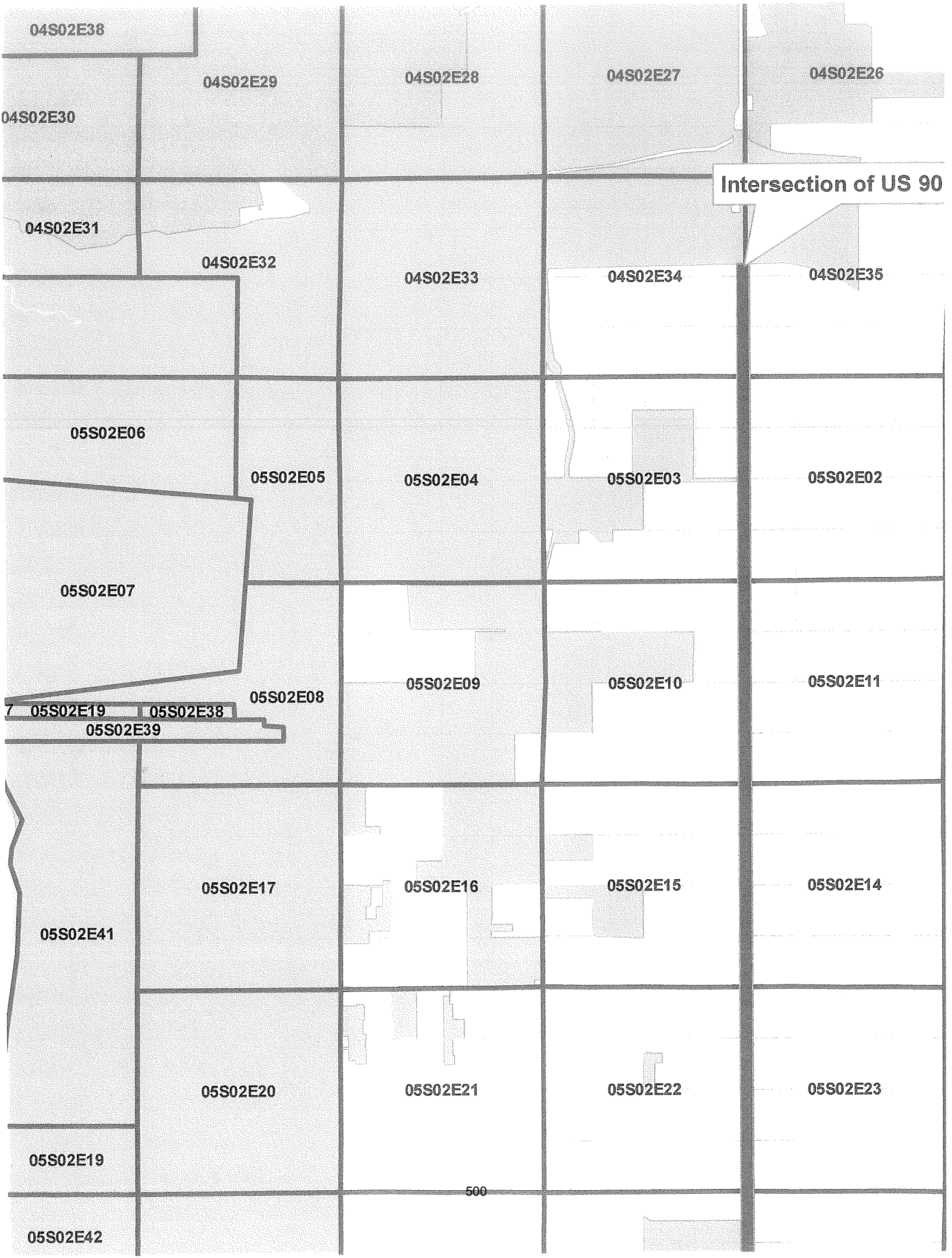
04S02E38
04S02E29
04S02E28
04S02E27
04S02E26
04S02E30
Intersection of US 90
04S02E31
04S02E32
04S02E33
04S02E34
04S02E35
05S02E06
05S02E05
05S02E04
05S02E03
05S02E02
05S02E07
05S02E08
05S02E09
05S02E10
05S02E11
7
05S02E19
05S02E38
05S02E39
05S02E17
05S02E16
05S02E15
05S02E14
05S02E41
05S02E20
05S02E21
05S02E22
05S02E23
05S02E19
05S02E42

SR 181 ROW –LAWSON ROAD SOUTH TO SOUTHERN CITY LIMIT

LEGAL DESCRIPTION:

BEGINNING AT THE POINT OF INTERSECTION OF THE SOUTH RIGHT-OF-WAY LINE OF LAWSON ROAD AND THE WEST RIGHT-OF-WAY LINE OF STATE HIGHWAY 181 (FORMERLY COUNTY ROAD 27), SECTION 34, TOWNSHIP 4 SOUTH, RANGE 2 EAST, FOR THE POINT OF BEGINNING; THENCE RUN SOUTHERLY ALONG THE WEST RIGHT-OF-WAY BOUNDARY LINE OF STATE HIGHWAY 181 TO THE POINT OF INTERSECTION OF THE SOUTH PROPERTY LINE OF OLDFIELD SUBDIVISION, PHASE ONE AS RECORDED WITH THE JUDGE OF PROBATE BALDWIN COUNTY, ALABAMA ON SLIDE 2328-C&D, SECTION 34, TOWNSHIP 5 SOUTH, RANGE 2 EAST; THENCE EASTERLY TO THE POINT OF INTERSECTION OF THE SOUTH PROPERTY LINE OF DUNMORE SUBDIVISION, PHASE ONE AS RECORDED WITH THE JUDGE OF PROBATE BALDWIN COUNTY, ALABAMA ON SLIDE 2414-A&B, SECTION 35, TOWNSHIP 5 SOUTH, RANGE 2 EAST; THENCE NORTHERLY ALONG THE EAST RIGHT-OF-WAY BOUNDARY LINE OF STATE HIGHWAY 181 TO THE POINT OF THE PROJECTED INTERSECTION OF THE EAST RIGHT-OF-WAY LINE OF STATE HIGHWAY 181 AND THE SOUTH RIGHT-OF-WAY LINE OF LAWSON ROAD; THENCE WEST TO THE POINT OF BEGINNING.

CITY OF DAPHNE, ALABAMA
ORDINANCE 2011-____

AN ORDINANCE TO ANNEX THE RIGHT OF WAY OF ALABAMA STATE HIGHWAY 181 FROM LAWSON ROAD SOUTH TO THE SOUTHERNMOST CORPORATE LIMITS OF THE CITY OF DAPHNE

WHEREAS, on the 25th day of May, 2011, the State of Alabama, being the owner of the real property herein described, did file with the City a letter containing the signature of Vincent E. Calametti, P.E., an authorized agent of the State of Alabama Department of Transportation, and a map of said property showing its proximity to the corporate limits of the City of Daphne, Alabama, whereby the State of Alabama provided its consent to the annexation of said real property into the corporate limits of the City of Daphne, Alabama; and,

WHEREAS, the City of Daphne, Alabama, desires to utilize said real property for the health, safety, and welfare purposes of providing fire and police protection; and,

WHEREAS, the Planning Commission of the City of Daphne, Alabama, at its regularly scheduled meeting of June 23, 2011, forwarded a unanimous favorable recommendation to the City Council of the City of Daphne, Alabama for annexation of the areas shown in Exhibit "A"; and,

WHEREAS, after proper publication, a public hearing was held on August 1, 2011, by the City Council of the City of Daphne concerning said letter for annexation; and,

WHEREAS, the City Council of the City of Daphne determined it is in the public interest that said real property be annexed into the City of Daphne, Alabama and that all legal requirements for annexing said real property have been met pursuant to Sections 11-42-20 through 11-42-24, Code of Alabama (1975).

NOW THEREFORE, BE IT ORDAINED BY THE CITY COUNCIL OF THE CITY OF DAPHNE, ALABAMA, AS FOLLOWS:

SECTION I: ANNEXATION

The boundary lines of the City of Daphne, Alabama, be, and the same are hereby altered or rearranged as to include all of the territory heretofore encompassed by the corporate limits of the City of Daphne, Alabama and in addition thereto the following described territory, to-wit:

Name: Right-of-Way of Alabama State Highway 181 from Lawson Road southward unto the southernmost City limits

Legal Description: BEGINNING AT THE POINT OF INTERSECTION OF THE SOUTH RIGHT-OF-WAY LINE OF LAWSON ROAD AND THE WEST RIGHT-OF-WAY LINE OF STATE HIGHWAY 181 (FORMERLY COUNTY ROAD 27), SECTION 34, TOWNSHIP 4 SOUTH, RANGE 2 EAST, FOR THE POINT OF BEGINNING; THENCE RUN SOUTHERLY ALONG THE WEST RIGHT-OF-WAY BOUNDARY LINE OF STATE HIGHWAY 181 TO THE POINT OF INTERSECTION OF THE SOUTH PROPERTY LINE OF OLDFIELD SUBDIVISION, PHASE ONE AS RECORDED WITH THE JUDGE OF PROBATE BALDWIN COUNTY, ALABAMA ON SLIDE 2328-C&D, SECTION 34, TOWNSHIP 5 SOUTH, RANGE 2 EAST; THENCE EASTERLY TO THE POINT OF INTERSECTION OF THE SOUTH PROPERTY LINE OF DUNMORE SUBDIVISION, PHASE ONE AS RECORDED WITH THE JUDGE OF PROBATE BALDWIN COUNTY, ALABAMA ON SLIDE 2414-A&B, SECTION 35, TOWNSHIP 5 SOUTH, RANGE 2 EAST; THENCE NORTHERLY ALONG THE EAST RIGHT-OF-WAY BOUNDARY LINE OF STATE HIGHWAY 181 TO THE POINT OF THE PROJECTED INTERSECTION OF THE EAST RIGHT-OF-WAY LINE OF STATE HIGHWAY 181 AND THE SOUTH RIGHT-OF-WAY LINE OF LAWSON ROAD; THENCE WEST TO THE POINT OF BEGINNING.

Being contiguous to the Corporate Limits of the City of Daphne, Alabama.

SECTION II: PUBLICATION

This ordinance shall be published as provided by law, and a certified copy of the same shall be filed with the Probate Court of Baldwin County, Alabama.

SECTION III: SEVERABILITY

The provisions of this Ordinance are severable. If any section, subsection, sentence, clause, phrase, or portion of this Ordinance is for any reason held invalid or unconstitutional by any court of competent jurisdiction, such portion shall be deemed a separate, distinct, and independent provision and such holding shall not affect the validity of the remaining portions thereof.

SECTION IV: EFFECTIVE DATE

This Ordinance shall become effective immediately and be in full force after final passage and publication as required by law.

APPROVED AND ADOPTED BY THE CITY COUNCIL OF THE CITY OF DAPHNE, ALABAMA ON THIS THE ____ DAY OF _____, 2011.

_____
CATHY S. BARNETTE
COUNCIL PRESIDENT

_____
FRED SMALL,
MAYOR

ATTEST:

_____
DAVID COHEN,
CITY CLERK, MMC

PLEASE Publish in the Bulletin Legal Section on **Friday, July 8, 2011**

FIRST NOTICE OF PUBLIC HEARING

Notice is hereby given the first time that the City Council of the City of Daphne will hold a Public Hearing on August 1, 2011 at 6:30 pm in the Council Chambers at City Hall, 1705 Main Street, Daphne, Alabama. The public is welcome to attend and offer comments opposing or favoring a proposed Ordinance annexing certain property as presented below. Any person with an American's with Disabilities Act disability must contact the City Clerk's office ten days prior to the Public Hearing, in order for accommodations to be made.

David L. Cohen, City Clerk, MMC

PROPOSED ORDINANCE:

CITY OF DAPHNE, ALABAMA
ORDINANCE 2011-____

AN ORDINANCE TO ANNEX THE RIGHT OF WAY OF ALABAMA STATE HIGHWAY 181 FROM LAWSON ROAD SOUTH TO THE SOUTHERNMOST CORPORATE LIMITS OF THE CITY OF DAPHNE

WHEREAS, on the 25th day of May, 2011, the State of Alabama, being the owner of the real property herein described, did file with the City a letter containing the signature of Vincent E. Calametti, P.E., an authorized agent of the State of Alabama Department of Transportation, and a map of said property showing its proximity to the corporate limits of the City of Daphne, Alabama, whereby the State of Alabama provided its consent to the annexation of said real property into the corporate limits of the City of Daphne, Alabama; and,

WHEREAS, the City of Daphne, Alabama, desires to utilize said real property for the health, safety, and welfare purposes of providing fire and police protection; and,

WHEREAS, the Planning Commission of the City of Daphne, Alabama, at its regularly scheduled meeting of June 23, 2011, forwarded a unanimous favorable recommendation to the City Council of the City of Daphne, Alabama for annexation of the areas shown in Exhibit "A"; and,

WHEREAS, after proper publication, a public hearing was held on August 1, 2011, by the City Council of the City of Daphne concerning said letter for annexation; and,

PLEASE Publish in the Bulletin Legal Section on **Friday, July 15, 2011**

SECOND NOTICE OF PUBLIC HEARING

Notice is hereby given the second time, the first notice was published on July 8, 2011, that the City Council of the City of Daphne will hold a Public Hearing on August 1, 2011 at 6:30 pm in the Council Chambers at City Hall, 1705 Main Street, Daphne, Alabama. The public is welcome to attend and offer comments opposing or favoring a proposed Ordinance annexing certain property as presented below. Any person with an American's with Disabilities Act disability must contact the City Clerk's office ten days prior to the Public Hearing, in order for accommodations to be made.

David L. Cohen, City Clerk, MMC

PROPOSED ORDINANCE:

CITY OF DAPHNE, ALABAMA
ORDINANCE 2011-____

AN ORDINANCE TO ANNEX THE RIGHT OF WAY OF ALABAMA STATE HIGHWAY 181 FROM LAWSON ROAD SOUTH TO THE SOUTHERNMOST CORPORATE LIMITS OF THE CITY OF DAPHNE

WHEREAS, on the 25th day of May, 2011, the State of Alabama, being the owner of the real property herein described, did file with the City a letter containing the signature of Vincent E. Calametti, P.E., an authorized agent of the State of Alabama Department of Transportation, and a map of said property showing its proximity to the corporate limits of the City of Daphne, Alabama, whereby the State of Alabama provided its consent to the annexation of said real property into the corporate limits of the City of Daphne, Alabama; and,

WHEREAS, the City of Daphne, Alabama, desires to utilize said real property for the health, safety, and welfare purposes of providing fire and police protection; and,

WHEREAS, the Planning Commission of the City of Daphne, Alabama, at its regularly scheduled meeting of June 23, 2011, forwarded a unanimous favorable recommendation to the City Council of the City of Daphne, Alabama for annexation of the areas shown in Exhibit "A"; and,

WHEREAS, after proper publication, a public hearing was held on August 1, 2011, by the City Council of the City of Daphne concerning said letter for annexation; and,

/END SYNOPSIS

Daphne Utilities

DRAFT MINUTES

Utilities Board Meeting

City of Daphne Council Chambers ◆ April 27, 2011 ◆ 5:00 p.m.

I. CALL TO ORDER

The regular Board meeting for the Utilities Board of the City of Daphne was held on April 27, 2011 and called to order by Chairman Segalla, at 5:03 p.m.

II. ROLL CALL

MEMBERS PRESENT: Robert Segalla, Chairman
Lon Johnston, Secretary/Treasurer
Fenton E. Jenkins, Vice Chairman
Ron Scott
Fred Small, Mayor

OTHERS ABSENT:

OTHERS PRESENT: Jerry Speegle – Board Attorney
Rob McElroy – General Manager
Danny Lyndall – Operations Manager
Drew Klumpp – Administrative Services Manager
Deloris Brown – Human Resources Manager
Lori Scharles – Executive Assistant
Teresa Logiotatos - Finance Manager
Melinda Immel – Volkert & Associates
Doug Bailey – HMR

OTHERS ABSENT:

III. PLEDGE OF ALLEGIANCE

The Chairman led the Board and meeting attendees in the Pledge of Allegiance.

IV. APPROVAL OF MINUTES

a. *Utilities Board Minutes from March 30, 2011:*

The Chairman inquired if there were any corrections noted for the submitted Minutes from the March 30, 2011, Utilities Board meeting.

MOTION BY Ron Scott to approve the submitted Minutes for March 30, 2011; Seconded by Lon Johnston.

AYE: ***JENKINS, JOHNSTON, SCOTT, SEGALLA, SMALL*** **ABSENT:** **ABSTAIN:**

MOTION CARRIED

b. *Utilities Board Minutes from April 11, 2011:*

The Chairman inquired if there were any corrections noted for the submitted Minutes from the April 11, 2011, Utilities Board meeting.

MOTION BY Lon Johnston Scott to approve the submitted Minutes for April 11, 2011; Seconded

by Fenton Jenkins
AYE: ***JENKINS, JOHNSTON, SEGALLA*** **ABSENT:** **ABSTAIN:** ***SCOTT, SMALL***
MOTION CARRIED

V. OLD BUSINESS

a. *Central Services Building – Update*

Danny Lyndall advised the Board that construction continues to be delayed due to a permit approval from ADEM, and hopefully be approved within the next few weeks. Melinda Immel explained why the permitting process has changed and is taking longer to be approved.

b. *Spanish Fort Sewer Franchise issues*

No updated information was reported.

c. *19 Acres - Daphne Utilities property*

Jerry Speegle advised the board on his progress with Daphne City Attorney Jay Ross. Mayor Small commented also that he has left word for Mr. Ross to respond to him on this issue as well as the gas franchise agreement. Mr. Scott expressed his frustration and requested that a meeting with Mr. Ross, Mr. Speegle and others to lay out a timeline, hold to it and get it removed from the agenda. Mr. Speegle was to arrange the meeting.

Mr. Scott commented that a topic missing from the agenda is the issue of bathrooms at Bay Front Park and asked to have it included on the agenda.

d. *Items in Abeyance:*

1. **Gas Franchise Agreement –** No current information was reported.
2. **Sewer Only Cutoff Policy –** No current information was reported.

VI. NEW BUSINESS –

a. *2011-02 – Resolution for Municipal Water Pollution Prevention (MWPP) Program*

MOTION BY Mayor Fred Small to approve RESOLUTION 2011-02 - Resolution For Municipal Water Pollution Prevention (MWPP) Program; Seconded by Ron Scott.
AYE: ***JENKINS, JOHNSTON, SCOTT, SEGALLA, SMALL*** **ABSENT:** **ABSTAIN:**
MOTION CARRIED

VII. BOARD ATTORNEY'S REPORT

Mr. Speegle had nothing further to add to his report but suggested an executive session to discuss one aspect of pending litigation. The Chairman recommended holding executive session after Public Participation.

Mr. Johnston commented that with the fuel costs increasing, a publicity push for the grease recycling program would be in order

VIII. FINANCIAL REPORT

Teresa Logiotatos commented on the issue of the bad-debt expense from the previous board meeting and clarified her response. She also reviewed the financials with the Board however explained that it was a typical month and answered questions from the Board members.

IX. GENERAL MANAGER'S REPORT

a. *GM Report*

Rob McElroy pointed out the upcoming celebration luncheon planned for the Utilities' recent EPA Award of Excellence.

b. *Human Resources*

Deloris Brown commented and reviewed the Human Resources report for the Board.

Mr. Johnston noted that in addition to the publicity push for the grease recycling program, the Lend-A-Hand program should be included as well. Mr. Scott also remarked about the electronic payment increase and efforts to promote. Chairman Segalla inquired as to the new phone service; Drew Klumpp updated the Board on the status of the service.

c. *Operations Report*

Danny Lyndall updated the Board on the status of Well #1 on Sixth Street and the repair plans of the this well. He

informed the Board that the test well results for Well #12 were favorable and moving forward with the production well.

Mr. Jenkins asked about the treatment tank replacement at the Waste Water Treatment Facility. Mr. Lyndall responded that once the Central Services Facility is relocated to the new site, space will be available for additional tankage.

Melinda Immel of Volkert & Associates updated the Board of a letter of violation issued by EPA from 2003 and advised that this matter has been resolved.

Doug Bailey updated the Board on the Hwy 64 Sewer project and answered questions on the road for Well Road from Chairman Segalla.

X. BOARD ACTION – Previously addressed under New Business.

XI. PUBLIC PARTICIPATION – None.

XII. BOARD COMMENTS –

XIII. EXECUTIVE SESSION –

MOTION BY Ron Scott to go into Executive Session at 5:34 pm for discussion of pending and ongoing litigation; Confirmed as proper purposes by Jerry Speegle; Seconded by Lon Johnston.

AYE: JENKINS, JOHNSTON, SCOTT, SEGALLA, SMALL ***ABSENT: ABSTAIN:*** **MOTION CARRIED**

Executive Session adjourned at 6:04 pm.

XIV. ADJOURNMENT

MOTION BY Ron Scott to adjourn the meeting. Seconded by Mayor Fred Small.

AYE: ***JENKINS, JOHNSTON, SEGALLA, SCOTT, SMALL*** **ABSENT: ABSTAIN:**

MOTION CARRIED

The meeting adjourned at 6:04 pm.

CITY COUNCIL MEETING
MAYOR'S REPORT

NOTES:

CITY ATTORNEY'S REPORT

NOTES:

DEPARTMENT HEAD'S COMMENTS

CITY COUNCIL MEETING
RESOLUTIONS, ORDINANCES, ORDERS & OTHER BUSINESS

NOTES:

RECOMMENDATIONS

COUNCIL COMMENTS:

ORDINANCE 2011 - 50

Compressor Replacements (3) for the Boys & Girls Club

WHEREAS, Ordinance 2010-71 approved and adopted the Fiscal Year 2011 Budget on December 20, 2010; and

WHEREAS, subsequent to the adoption of the Fiscal Year 2011 budget, the City Council has determined that certain appropriations are required and should be approved and made a part of the Fiscal Year 2011 budget; and

WHEREAS, the Boys & Girls Club leases a building from the City and the City is responsible for certain maintenance items; and

WHEREAS, the compressor replacements are needed to keep the building operational; and

WHEREAS, the adopted budget does not include an appropriation for three (3) air conditioning compressor replacements for the Boys & Girls Club.

NOW, THEREFORE, BE IT ORDAINED by the City Council of the City of Daphne, Alabama, that: the Fiscal Year 2011 Budget is hereby amended to include a General Fund appropriation in the amount of $2,500 for three (3) air conditioning compressor replacements for the Boys & Girls Club.

APPROVED AND ADOPTED BY THE CITY COUNCIL OF THE CITY OF DAPHNE, ALABAMA, THIS _____ day of _____, 2011.

_____
Cathy S. Barnette, Council President

_____
Fred Small, Mayor

ATTEST:

_____
David L. Cohen, City, Clerk MMC

ORDINANCE 2011 - 51

Indoor Man Lift for Building Repairs and Maintenance

WHEREAS, Ordinance 2010-71 approved and adopted the Fiscal Year 2011 Budget on December 20, 2010; and

WHEREAS, subsequent to the adoption of the Fiscal Year 2011 budget, the City Council has determined that certain appropriations are required and should be approved and made a part of the Fiscal Year 2011 budget; and

WHEREAS, the adopted budget does not include an appropriation for an indoor man lift for building repairs and maintenance; and

WHEREAS, certain improvements and repairs requiring an indoor man lift are necessary for maintenance of city buildings.

NOW, THEREFORE, BE IT ORDAINED by the City Council of the City of Daphne, Alabama, that: the Fiscal Year 2011 Budget is hereby amended to include a General Fund appropriation in the amount of $7,500 for an indoor man lift for building improvement, repairs and maintenance.

APPROVED AND ADOPTED BY THE CITY COUNCIL OF THE CITY OF DAPHNE, ALABAMA, THIS _____ day of _____, 2011.

_____
Cathy S. Barnette, Council President

_____
Fred Small, Mayor

ATTEST:

_____
David L. Cohen, City Clerk, MMC

ORDINANCE 2011- 52

Right of Way Acquisition: Well Road

WHEREAS, Ordinance 2010-71 approved and adopted the Fiscal Year 2011 Budget on December 20, 2010; and

WHEREAS, subsequent to the adoption of the Fiscal Year 2011 budget, the City Council has determined that certain appropriations are required and should be approved and made a part of the Fiscal Year 2011 budget; and

WHEREAS, the Daphne Utility Board is funding the design and construction of Well Road and the City is responsible acquisition of all necessary Right of Ways (ROW); and

WHEREAS, additional ROW is required for completion of construction of Well Road; and

WHEREAS, the ROW property is available to be purchased from Mrs. Patricia Gipson in the amount of $2,500.

NOW, THEREFORE, BE IT ORDAINED by the City Council of the City of Daphne, Alabama, that an appropriation of $2,500 is hereby approved for the acquisition of 8,200 sq. ft. of property for ROW on Well Road and the Mayor is authorized to sign any and all documents required for the acquisition of the ROW property.

APPROVED AND ADOPTED by the Mayor and City Council of the City of Daphne, Alabama, this _____ day of _____ , 2011.

_____
Cathy S. Barnette, Council President

_____
Fred Small, Mayor

ATTEST:

_____
David L. Cohen,
City Clerk MMC

ORDINANCE 2011- 53

Lodging Tax Appropriation: Pedestrian Bridge @ D'Olive Creek Engineering Design Fee & Environmental Permit

WHEREAS, Ordinance 2010-71 approved and adopted the Fiscal Year 2011 Budget on December 20, 2010; and

WHEREAS, subsequent to the adoption of the Fiscal Year 2011 budget, the City Council has determined that certain appropriations are required and should be approved and made a part of the Fiscal Year 2011 budget; and

WHEREAS, Lodging Tax funds may be used for the purchase, development, and maintenance of waterfront property; and

WHEREAS, it has been determined that a pedestrian bridge is needed at D'Olive Creek; and

WHEREAS, the bridge will start at Hampton Inn and tie the Creek into the existing boardwalk.

NOW, THEREFORE, BE IT ORDAINED by the City Council of the City of Daphne, Alabama, that the Fiscal Year 2011 Budget is hereby amended to include an additional Lodging Tax appropriation in the amount of **$10,500** for 1) the environmental permitting of the Pedestrian Bridge @ D'Olive Creek - not to exceed $2,000; and 2) $8,500 for Engineering Design.

APPROVED AND ADOPTED by the Mayor and City Council of the City of Daphne, Alabama, this _____ day of _____ , 2011.

_____
Cathy S. Barnette, Council President

_____
Fred Small, Mayor

ATTEST:

_____
David L. Cohen, City Clerk MMC

CITY OF DAPHNE
ORDINANCE NO. 2011 - 54

AN ORDINANCE TO ADOPT THE CITY'S OFFICIAL LAND USE AND DEVELOPMENT ORDINANCE AND TO REPEAL ORDINANCE No. 2002-22 AND ALL ITS SUBSEQUENT AMENDMENTS

WHEREAS, the Planning Commission of the City of Daphne at their regular meeting held on February 25, 2010, considered certain amendments to the City of Daphne Land Use and Development Ordinance and set forth an affirmative recommendation to the City Council of the City of Daphne that said amendments should be affirmed in the form of a new Land Use and Development Ordinance ("Ordinance"); and,

WHEREAS, due notice of the said Ordinance has been presented to the public as required by law through publication and open display at the City of Daphne Public Library and City Hall; and,

WHEREAS, a public hearing in regards to the Ordinance was held on July 5, 2011; and,

WHEREAS, the Mayor and City Council of the City of Daphne, after due consideration, deem that the new Ordinance is proper and in the interests of the health, safety, and welfare of the citizens of the City of Daphne.

NOW, THEREFORE, BE IT ORDAINED BY THE CITY COUNCIL OF THE CITY OF DAPHNE, ALABAMA, AS FOLLOWS:

SECTION I: LAND USE AND DEVELOPMENT ORDINANCE.

The City of Daphne Land Use and Development Ordinance No. 2011-54 shall be considered the official Land Use and Development Ordinance of the City of Daphne, Alabama.

SECTION II: REPEALER

The City of Daphne Ordinances Nos. 2002-22, 2003-26, 2004-50, 2004-51, 2005-38, 2005-53, 2006-39, 2006-76, 2008-45, and 2010-07 are hereby repealed in their entirety. Any Ordinance, or parts thereof, heretofore adopted by the City Council of Daphne, Alabama, which is in conflict with this Ordinance be and is hereby repealed to the extent of such conflict.

SECTION III: SEVERABILITY

If any section, subsection, sentence, clause, phrase, or portion of this ordinance is for any reason held invalid or unconstitutional by any court of competent jurisdiction, such portion shall be deemed a separate, distinct and independent provision and such holding shall not affect the validity of the remaining portions hereof.

SECTION IV: EFFECTIVE DATE

This Ordinance shall take effect and be in force from and after the date of its approval by the City Council of the City of Daphne and publication as required by law.

ADOPTED AND APPROVED BY THE CITY COUNCIL OF THE CITY OF DAPHNE, ALABAMA, THIS____ DAY OF _____, 2011.

_____
CATHY BARNETTE,
CITY COUNCIL PRESIDENT

_____
FRED SMALL,
MAYOR

ATTEST:

_____
DAVID COHEN,
CITY CLERK, MMC